Ranger RP Compact Scales
Instruction Manual

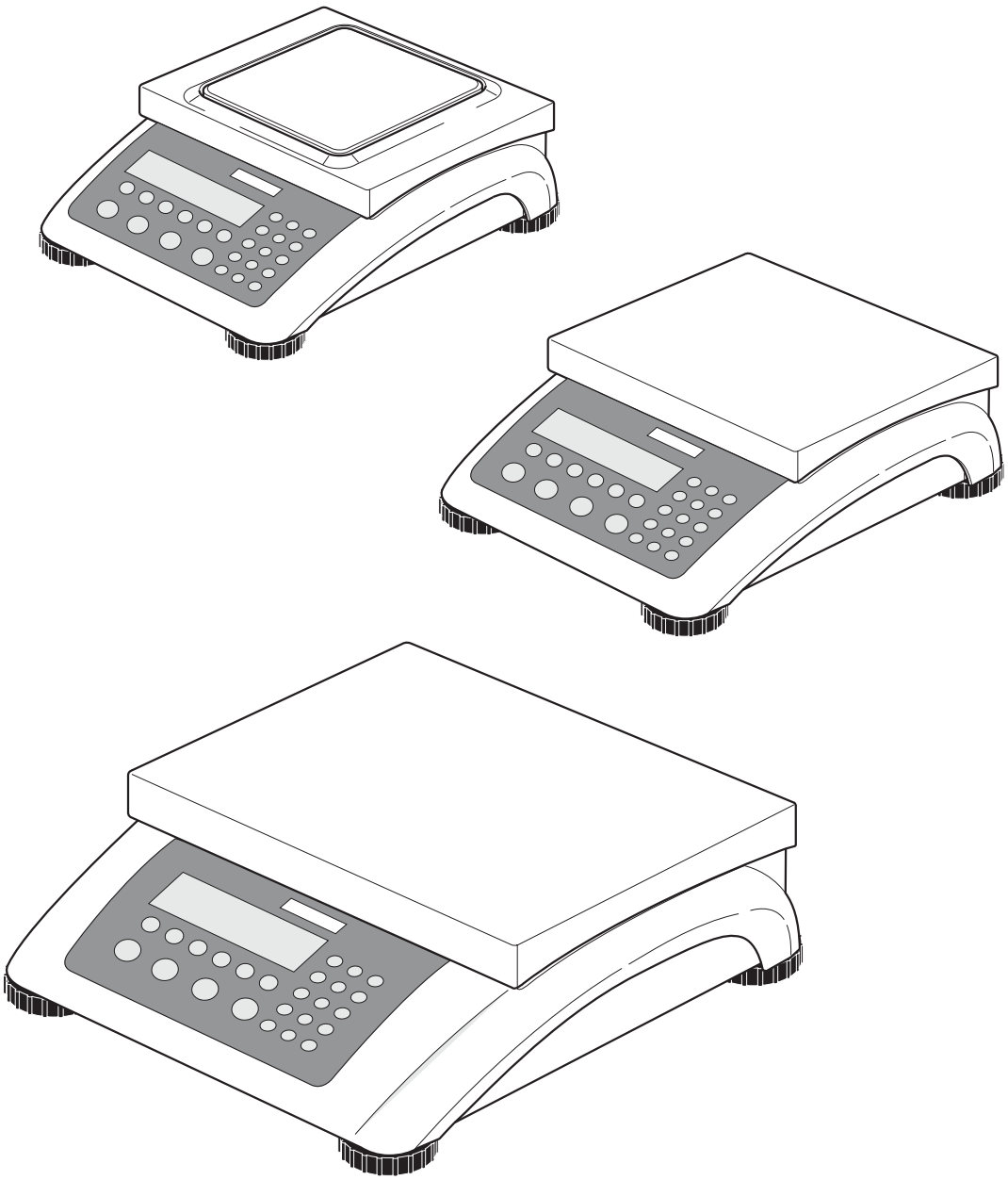

Table of contents

Page

1 Introduction 5
1.1 Safety instructions 5
1.2 Description 6
1.3 Putting into operation 10

2 Operation 12
2.1 Switching on and off 12
2.2 Zeroing / Zero point correction 12
2.3 Simple weighing 12
2.4 Weighing with tare 13
2.5 Displaying the capacity available 15
2.6 Dynamic weighing 15
2.7 Weighing-in to a target weight and checkweighing 16
2.8 Working with identifications 18
2.9 Printing results 18
2.10 Displaying info 19
2.11 Switching scales 19
2.12 Totalising 20
2.13 Cleaning 21

3 Counting 22
3.1 Counting parts into a container 22
3.2 Counting parts out of a container 23
3.3 Counting with variable reference quantity 23
3.4 Counting with minimum accuracy 23
3.5 Reference optimization 24
3.6 Counting with automatic reference determination 24
3.7 Counting with a known average piece weight 24
3.8 Counting by calling up a saved average piece weight 25
3.9 Counting by calling up a saved target quantity 26
3.10 Counting with two scales 27

4 Settings in the menu 29
4.1 Operating the menu 29
4.2 Overview 31
4.3 Scale settings (SCALE) 34
4.4 Application settings (APPLICATION) 37
4.5 Terminal settings (TERMINAL) 41
4.6 Configuring interfaces (COMMUNICATION) 42
4.7 Diagnosis and printing out of the menu settings (DIAGNOS) 46

5 Interface description 48
5.1 OHAUS interface commands 48
5.1 SICS interface commands 50
5.2 TOLEDO Continuous mode 53

6 Event and error messages 55

7 Technical data and accessories.....57
7.1 Technical Data 57
7.2 Accessories 63

8 Appendix.....64
8.1 Information for certified scales in EC countries 64
8.2 Safety checks.....64
8.3 Table of Geo Values.....65
8.4 Sample protocols 68
8.5 Legal for trade Applications.....69

9 Index.....75

1 Introduction

1.1 Safety instructions

CAUTION!

Do not use Ranger RP in hazardous areas!

DANGER!

Electric shock hazard!

▲ Always pull out the mains plug before any work on the device.

DANGER!

Electric shock hazard if the mains cable is damaged!

▲ Check the mains cable for damage regularly and replace it immediately if it is damaged.

▲ On the rear side of the device, maintain a clearance of at least 3 cm in order to prevent the mains cable bending too much.

CAUTION!

On no account open the device!

The warranty is void if this stipulation is ignored. The device may only be opened by authorized persons.

▲ Call OHAUS Service.

CAUTION!

Handle the compact scale with care.

The scale is a precision instrument.

▲ When the weighing pan has been removed, never clean the area under the load plate holder with a solid object!

▲ Do not put excessive loads on the scale.

▲ Avoid banging the weighing pan.

Disposal

➜ Observe the valid environmental regulations when disposing of the scale.

If the device has a rechargeable battery:

The battery contains heavy metals and therefore must not be disposed of with normal waste.

➜ Observe the local regulations for disposing of environmentally hazardous materials.

Note **Use with foodstuffs**

Parts coming into contact with foodstuffs have smooth surfaces and are easy to clean. The materials used do not splinter and are free of harmful substances.

With foodstuffs, it is recommended to use the accessory protective cover.

➜ Clean the protective cover regularly and carefully.

➜ Replace damaged or very dirty protective cover immediately.

1.2 Description

This user manual applies to the following types of compact scales:

- Compact scale RP..S with strain gauge weighing cell
- Compact scale RP..M with MFR weighing cell

The compact scales are available in a small and large size in various capacities and resolutions.

The power supply is carried out via a built-in power supply device, an internal rechargeable battery with an external mains adapter or an external battery.

One of the following options can also be ordered:

- Additional interface RS232
- Analog second scale interface

1.2.1 Overview

1 Display
2 Scale specifications
3 Load plate
4 Adjustable foot
5 Numerical keys
6 Function keys

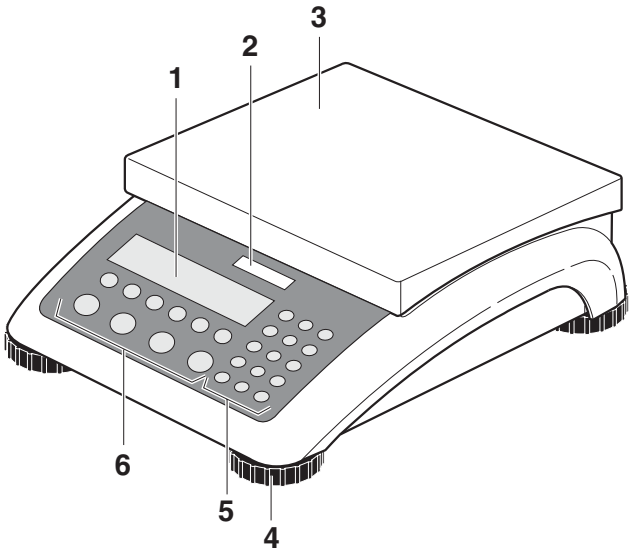

1 Power supply connection
2 Optional interface
3 RS232 interface

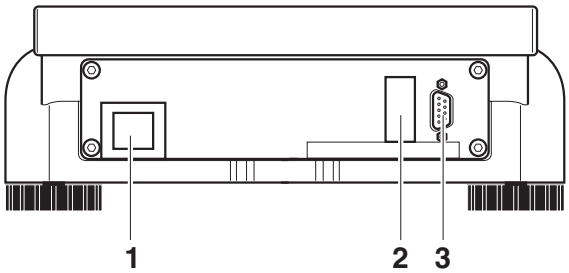

1.2.2 Display

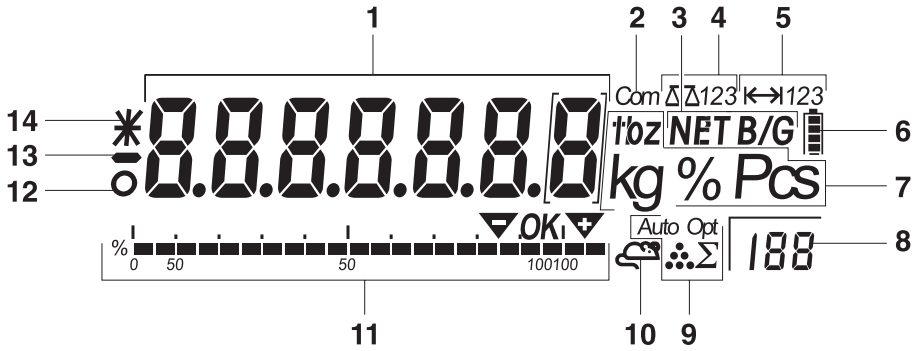

1 7-segment display, 7 digits, with decimal point

2 Active interface

3 Symbol for displaying gross and net values

4 Active scale

5 Weighing range display

6 Battery charge level; only present on scales with a battery

7 Weight units

8 Selected reference quantity

9 Symbols for optimizing the average piece weight and accumulating

10 Symbol for dynamic weighing

11 Graphic display of the weighing range, display for checkweighing

12 Stability monitor (goes out when a stable weight value is reached)

13 Sign

14 Identification for changed or calculated weight values, e.g. higher resolution, minimum weight not reached

1.2.3 Keypad

Main functions

Key	Function in operating mode	Function in the menu
ON/OFF (*Exit*)	Switching device on / off, abort	To the last menu item `–End–`
ZERO (*Back*)	Setting scale to zero	Scrolling back
TARE (*No*)	Taring scale	Scrolling forward
PRINT *MENU* (*Yes*)	Transfer key Long key press: Calling up menu	Activating menu item Accepting selected setting

Additional functions

Key	Function
Info	Info key: Calling up additional information, e.g. gross weight, average piece weight, higher resolution …
Scale Select	Switching the scale
Count Weight	Switching between weight value and number of pieces
Manual Set	Weighing in reference or defining average piece weight numerically
Sample 10	Determining average piece weight from 10 pieces
Sample Size	Determining average piece weight from any number of pieces
ID	Entering identification
Mem	Memory
+/-	Sign; adding/subtracting
C	Clear key
Keys 0 … 9 and decimal point	Numerical keys for entering weight values, identifications …

1.3 Putting into operation

1.3.1 Selecting or changing the location

The correct location is crucial to the accuracy of the weighing results!

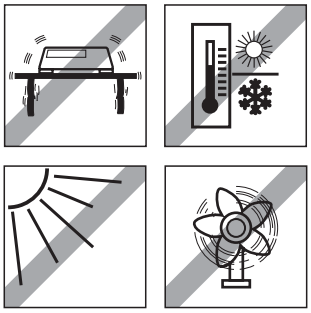

➜ Select a stable, vibration-free and if possible a horizontal location.

The ground must be able to safely bear the weight of the fully loaded scale.

Observe the following environmental conditions:

- No direct sunlight
- No strong drafts
- No excessive temperature fluctuations

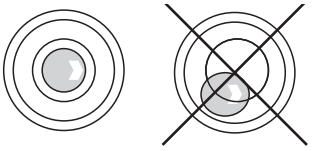

Aligning the scale

Only scales that have been aligned precisely horizontally provide accurate weighing results. The certified scales have a spirit level to simplify alignment.

➜ Turn the adjustable feet of the scale until the spirit level's air bubble is inside the inner circle.

1.3.2 Connecting the power supply

CAUTION!

Before connecting the scale to the mains, check whether the voltage value printed on the rating plate corresponds with the local mains voltage.

▲ Never connect the device if the voltage value printed on the rating plate is different to the local mains voltage.

➜ Plug the mains plug into the socket.

After connection, the device performs a self-test. When the zero display appears, the device is ready to weigh.

➜ Calibrate the device in order to obtain the greatest possible precision, see Section 4.3.2.

Note Partially certified scales (scales with first-level certification) must be certified by an authorised body.

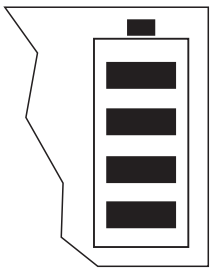

Scales with a built-in battery can work independently from the mains for approximately 30 hours in normal operation. A prerequisite for this is that the background lighting is switched off and that no peripheral devices are connected.

The device automatically switches to battery operation as soon as the mains supply is interrupted. When the mains supply is restored, the device automatically switches back to mains operation.

The battery symbol indicates the present charging level of the battery. 1 segment corresponds to approx. 25 % capacity. When the symbol flashes the battery must be charged (min. 4 hours). The charging period is extended if work is continued during charging. The battery is protected against overcharging.

Note The battery's charging capacity can be reduced under continuous mains operation.

➜ To maintain the charging capacity, after a maximum of 4 weeks discharge the battery completely before recharging it.

2 Operation

2.1 Switching on and off

Switching on

➔ Press **ON/OFF**.

The scale conducts a display test. When the weight display appears, the scale is ready to weigh.

Switching off

➔ Press **ON/OFF**.

Before the display goes out, `-OFF-` appears briefly.

2.2 Zeroing / Zero point correction

Zeroing corrects the influence of slight changes on the load plate.

Manual

1. Unload scale.
2. Press **ZERO**.

   The zero display appears.

Automatic

In the case of scales that cannot be certified, the automatic zero point correction can be deactivated in the menu or the amount can be changed.

As standard, the zero point of the scale is automatically corrected when the scale is unloaded.

2.3 Simple weighing

1. Place weighing sample on scale.
2. Wait until the stability monitor ○ goes out.
3. Read weighing result.

2.4 Weighing with tare

2.4.1 Taring

➜ Place the empty container on the scale and press **TARE**.

The zero display and the symbol **NET** appear.

The tare weight remains saved until it is cleared.

2.4.2 Clearing the tare

➜ Unload scale and press **TARE**.

The symbol **NET** goes out, the zero display appears.

or

➜ Press **C**.

The symbol **NET** goes out, the gross weight appears in the display.

If `A.CL-tr` is activated in the menu, the tare weight is automatically cleared as soon as the scale is unloaded.

2.4.3 Automatic taring

Prerequisite

`A-tArE` is activated in the menu, the symbol **T** flashes in the display.

➜ Place the container or packaging material on the scale.

The packaging weight is automatically saved as the tare weight, the zero display and the symbol **NET** appear.

2.4.4 Numerical tare weight entry

1. Enter the known tare weight numerically and press **TARE**.

   The entered weight is automatically saved as the tare weight, the symbol **NET** and the tare weight with a minus sign appear.

2. Place the filled container on the scale.

   The net weight appears in the display.

2.4.5 Taring by calling up a saved tare value

Ranger RP have a total of 100 memory locations for frequently used tare values, average piece weights, target weights and target quantities. In the factory setting, the memory locations 01 to 40 are reserved for tare values. The saved tare values are also preserved when the scale is switched off.

Saving tare weights

1. Determine the tare weight in one of the ways described earlier.
2. Enter the memory location number (factory setting: 1 ... 40) and keep **Mem** pressed until the confirmation appears in the display, e.g. `tArE.12`.

Note If a tare weight had already been saved under the selected memory location, the message `rEPLACE` appears in the display.

- To save the new tare weight, press **Yes**. The old tare weight is overwritten.
- To abort the save process, press **No**. The previous memory location assignment remains valid.

Calling up tare weights

➜ Enter the number of the memory location with the required tare weight (factory setting: 1 ... 40) and press **Mem** briefly.

The selected tare value is loaded from the memory and appears briefly in the display. The scale tares with the selected tare value and then displays the current net weight.

Clearing saved tare weights

1. Enter the number of the memory location with the tare weight to be cleared (factory setting: 1 ... 40) and press **Mem** briefly.

   The saved tare value is displayed.
2. Press **C** within 2 seconds.

   `CLEArED` briefly appears in the display. The saved tare value is cleared.

2.4.6 Chain tare

Prerequisite

The tare function `CHAIn.tr` is activated in the menu.

With this function it is possible to tare several times if, for example, cardboard is placed between individual layers in a container.

1. Place the first container or packaging material on the scale and press **TARE**.

   The packaging weight is automatically saved as the tare weight, the zero display and the symbol **NET** appear.
2. Weigh the weighing sample and read/print out the result.
3. Place the second container or packaging material on the scale and press **TARE** again.

   The total weight on the scale is saved as the new tare weight. The zero display appears.
4. Weigh the weighing sample in the second container and read/print the result.
5. Repeat the last two steps for other containers.

2.5 Displaying the capacity available

The scale has a graphic display of the scale capacity available. The bar indicates how many percent of the scale capacity is already occupied and what capacity is still available. In the example, approx. 65 % of the scale capacity is occupied.

2.6 Dynamic weighing

With the dynamic weighing function, it is possible to weigh restless weighing samples such as live animals. If this function is activated, the symbol appears in the display.

With dynamic weighing, the scale calculates the mean value from 56 weighing operations within 4 seconds.

With manual start

Prerequisite

`AVErAGE -> MAnuAL` is selected in the menu.

The weighing sample must be heavier than 5 scale divisions.

1. Place the weighing sample on the scale and wait until it has stabilized.
2. Press **PRINT** to start dynamic weighing.

   During dynamic weighing, horizontal segments appear in the display, and the dynamic result is then displayed with the symbol *****.
3. Unload the scale to be able to start a new dynamic weighing operation.

With automatic start

Prerequisite

`AVErAGE -> AUtO` is selected in the menu.

The weighing sample must be heavier than 5 scale divisions.

1. Place the weighing sample on the scale.

   The scale starts the dynamic weighing automatically.

   During dynamic weighing, horizontal segments appear in the display, and the dynamic result is then displayed with the symbol *****.

2. Unload the scale to be able to perform a new dynamic weighing operation.

2.7 Weighing-in to a target weight and checkweighing

The compact scales Ranger RP allow the weighing-in of goods to a particular target weight within defined tolerances. With this function it is possible to check whether weighing samples are within a defined tolerance range.

The compact scales Ranger RP have a total of 100 memory locations for frequently used tare values, average piece weights, target weights and target quantities.
In the factory setting, the memory locations 81 to 90 are reserved for target weights. The saved target weights are also preserved when the scales are switched off.

2.7.1 Saving target weights

1. Enter the memory location number (factory setting: 81 ... 90) and keep **Mem** pressed until the confirmation `tArGEt` appears in the display.
2. Enter the target weight in the defined unit, e.g. 1.5 kg, and confirm with **Yes**.

   The display `tOLER` appears and **+** flashes.

3. Enter the upper tolerance in the displayed weight unit, e.g. 0.1 kg, and confirm with **Yes**

   -or-

➜ Press **Yes**, enter the upper tolerance range in percent and confirm with **Yes**.

   The display `tOLEr` appears and **–** flashes.

4. Enter the lower tolerance accordingly.

   The scale returns to weighing mode.

Note If a target weight had already been saved under the selected memory location, the message `rEPLACE` appears in the display.

- To save the new target weight, press **Yes**. The old target weight is overwritten.
- To abort the save process, press **No**. The previous memory location assignment remains valid.

2.7.2 Calling up target weights

➜ Enter the number of the memory location with the required target weight (factory setting: 81 ... 90) and press **Mem** briefly.

The selected target weight and the tolerances are loaded from the memory and appear briefly in the display. The scale is now ready for weighing-in or check-weighing.

2.7.3 Weighing-in

1. Place the empty container on the scale and tare.
2. Fill the container with the weighing sample.

The dispensing process can be followed in the graphic display. The 50 % marking is on the far left here, so that more display segments are available for precise filling between 50 % and 100 %.

As long as the lower tolerance is not reached, the minus tolerance mark is displayed.

If the weight of the weighing sample is within the defined tolerance, the mark **OK** is visible and a short beep sounds if activated in the menu.

When the plus tolerance mark appears, the weight is above the permissible tolerance.

2.7.4 Checkweighing

1. Place the weighing sample on the scale.

2. Use the displayed mark to check whether the weighing sample is below, within or above the defined tolerance.

2.7.5 Clearing the saved target weights

1. Enter the number of the memory location with the target weight to be cleared (factory setting: 81 ... 90) and press **Mem** briefly.

   The saved target weight is displayed.
2. Press **C** within 2 seconds.

   `CLEArED` briefly appears in the display. The saved target weight is cleared.

2.8 Working with identifications

Weighing series can be assigned 2 identification numbers ID1 and ID2 with up to 40 characters that are also printed out on the protocols.

If for example a customer number and an article number are assigned, it can be clearly seen on the protocol which article was weighed for which customer.

2.8.1 Entering identification

1. Enter identification and press **ID**.

   `IdENt 1` appears in the display.

2. If the entered identification is to be saved as ID1, press **Yes**. If the entered identification is to be saved as ID2, first press **No**, and then press **Yes**.

   The scale returns to weighing mode.

2.8.2 Displaying identification

➜ Displaying ID1: Briefly press **ID** once.

The number currently assigned to the ID1 appears in the display. If no ID1 was assigned, `no Id` appears.

➜ Displaying ID2: Briefly press **ID** twice.

The number currently assigned to the ID2 appears in the display. If no ID2 was assigned, `no Id` appears.

2.8.3 Clearing identifications

1. Briefly press **ID** once to display ID1 or briefly press **ID** twice to display ID2.
2. Press **C** for as long as the identification is displayed.

   The clearing is briefly confirmed with the message `CLEArEd`.

2.9 Printing results

If a printer or computer is connected to the scale, the weighing results can be printed out or sent to a computer.

➜ Press **PRINT**.

The display contents are printed out and transferred to the computer. See Section 8.4 for sample protocols.

2.10 Displaying info

Up to 13 different values to be displayed can be configured in the menu for the key **Info**.

Depending on the configuration in the menu, see Section 4.4.5, the following values can be stored in any order (for example):

- Net quantity
- Gross weight
- Average piece weight
- Average piece weight, higher resolution
- Counting accuracy

1. Press **Info**.

   The first value is displayed.
2. Press **Info** again.

   The next value is displayed.
3. Repeat as often as necessary until the weight display appears again.

Note If **Info** is not pressed again within 5 seconds , the scale automatically changes to the weight display, even if all information has not yet been queried.

2.11 Switching scales

If a second scale or a weighing platform is connected, e. g. via the optional analog second scale interface, the currently active scale is shown in the display.

The second scale can be operated in exactly the same way as the first scale.

➜ Press **Scale Select**.

The display changes from one scale to the other.

2.12 Totalising

The compact scales Ranger RP can totalise weight values or pieces. Individual items can also be subtracted.

A connected printer offers you the possibility of generating a printout for each individual item and/or a complete printout. For settings in the menu, see Section 4.4.2.

2.12.1 Totalising items

1. Place the first item on the scale and press **+/-**.

   The weight value or the number of pieces are saved and, if necessary, printed out.
2. Unload scale.
3. Place the next item on the scale and press **+/-** again.

   The weight value and the number of pieces of the next item are added to those of the previous one.
4. Unload scale.
5. Repeat steps 3 and 4 for all other items.

2.12.2 Subtracting items

1. Place the item on the scale, press and hold down **+/-**.

   The weight value or the number of pieces are subtracted and, if necessary, printed out.
2. Unload scale.

2.12.3 Completing totalising

➜ When the last item has been totalised, press **C**.

The "Final Printout" is produced. The sum memory and the item counter are cleared. The scale is ready for the next totalising process.

2.12.4 Calling up sum information

If the key **Info** is assigned accordingly, the number of items, the net sum, the gross sum and the number of pieces of the current item can be called up via this key, see Section 4.4.5.

2.13 Cleaning

CAUTION!

Electric shock hazard!

▲ Before cleaning with a damp cloth, pull out the mains plug to disconnect the unit from the power supply.

CAUTION!

When the weighing pan has been removed, never clean the area under the load plate holder with a solid object!

This could damage the weighing cell.

Other cleaning information:

- Use damp cloths.
- Do not use any acids, alkalis or strong solvents.
- Do not clean using a high-pressure cleaning unit or under running water.
- If very dirty, remove the weighing pan, protective cover (if present) and adjustable feet and clean these items separately.
- Follow all the relevant instructions regarding cleaning intervals and permissible cleaning agents.

3 Counting

The compact scales Ranger RP have additional functions for piece counting.
The relevant settings in the menu are described in Section 4.4.1.

3.1 Counting parts into a container

1. Place the empty container on the scale and press **TARE**.

   The container is tared and the zero display appears.

2. Place **10** reference parts on the scale and press **Sample 10**.

   -or-

➜ Place the number of pieces displayed above the key **Sample Size** on the scale and press **Sample Size**

   The scale determines the average piece weight and then shows the number of pieces.

3. Add more parts to the container until the required number of pieces is reached.
4. When the piece counting is completed, press the key **C** to clear the result.

   The scale is ready for the next weighing or counting.

Note

- The average piece weight remains saved in the factory setting until a new average piece weight is determined.
- With **Count Weight** it is possible to switch between the number of pieces and the weighing units preset.
- Depending on the assignment, it is possible to display the average piece weight, i. e. the weight of an individual reference unit, with **Info**.
- If `A.CL-APW ON` is set in the menu, the average piece weight is automatically cleared after each counting operation. The average piece weight must be determined again for the next counting operation.
- If `ACCurCY ON` is set in the menu, the accuracy achieved is briefly shown after the number of pieces is determined.

3.2 Counting parts out of a container

1. Place the full container on the scale and press **TARE**.

   The container is tared and the zero display appears.

2. Remove **10** reference parts and press **Sample 10**.

   -or-

➜ Remove the number of pieces displayed above the key **Sample Size** and press **Sample Size**.

   The scale determines the average piece weight and then shows the number of pieces removed, together with a minus sign.

3. Remove more parts from the container until the required number of pieces is reached.

3.3 Counting with variable reference quantity

Prerequisite

`VAr-SPL ON` must be set in the menu.

1. Place any number of reference parts on the scale.
2. Enter the number of reference parts with the numerical keypad and press **Sample Size**

   The scale determines the average piece weight and then shows the number of pieces.

The rest of the counting process is as described earlier.

3.4 Counting with minimum accuracy

The item `Min.rEFW` in the menu allows to preset a minimum accuracy of 97.5 %, 99.0 % or 99.5 %. On the basis of this, the scale calculates the minimum reference weight necessary to reach the defined accuracy.

1. Place the reference parts on the scale and press **Sample 10** or **Sample Size**.
2. If the average piece weight is not sufficient to ensure the desired accuracy, `Add x` **PCS** appears.
3. Add the displayed number of pieces.

   The scale then automatically determines the average piece weight with the larger reference quantity.

The rest of the counting process is as described earlier.

3.5 Reference optimization

The greater the reference quantity, the more accurately the scale determines the number of pieces.

3.5.1 Automatic reference optimization

`rEF.OPt` -> `AUtO` must be set in the menu for this. The symbol **Auto Opt** appears in the display.

1. Place the reference parts on the scale and press **Sample 10** or **Sample Size**.
2. Place additional reference parts, max. the same number as for the first reference determination, on the scale.

   The scale automatically optimises the average piece weight with the larger number of reference parts.

The rest of the counting process is as described earlier.

Note The reference optimization can be performed several times.

3.6 Counting with automatic reference determination

Prerequisite

`A-SMPL ON` is set in the menu.

➜ Place the number of pieces displayed above the key **Sample Size** into the container.

The scale automatically determines the average piece weight and then shows the quantity.

The rest of the counting process is as described earlier.

3.7 Counting with a known average piece weight

➜ Enter the known average piece weight via the numerical keypad and press **Manual Set**.

The scale changes the unit to PCS.

The rest of the counting process is as described earlier.

3.8 Counting by calling up a saved average piece weight

The compact scales Ranger RP have a total of 100 memory locations for frequently used tare values, average piece weights, target weights and target quantities.
In the factory setting, the memory locations 41 to 80 are reserved for average piece weights. The saved average piece weights are also preserved when the scale is switched off.

3.8.1 Saving average piece weights

1. Determine the average piece weight in one of the ways described earlier.
2. Enter the memory location number (factory setting: 41 ... 80) and keep **Mem** pressed until the confirmation appears in the display, e.g. `APW.41`.

Note If an average piece weight had already been saved under the selected memory location, the message `rEPLACE` appears in the display.

- To save the new average piece weight, press **Yes**. The old average piece weight is overwritten.
- To abort the save process, press **No**. The previous memory location assignment remains valid.

3.8.2 Calling up average piece weights

➜ Enter the number of the memory location with the required average piece weight (factory setting: 41 ... 80) and press **Mem** briefly.

The selected reference value is loaded from the memory and appears briefly in the display. The scale determines the number of pieces with the selected reference value.

3.8.3 Clearing saved average piece weights

1. Enter the number of the memory location with the average piece weight to be cleared (factory setting: 41 ... 80) and press **Mem** briefly.

   The saved average piece weight is displayed.
2. Press **C** within 2 seconds.

   `CLEArED` briefly appears in the display. The saved average piece weight is cleared.

3.9 Counting by calling up a saved target quantity

The compact scales Ranger RP have a total of 100 memory locations for frequently used tare values, average piece weights, target weights and target quantities.
In the factory setting, the memory locations 91 to 100 are reserved for target quantities. The saved target quantities are also preserved when the scale is switched off.

3.9.1 Saving target quantities

1. Enter the memory location number (factory setting: 91 ... 100) and keep **Mem** pressed until the confirmation `tARGEt` appears in the display.
2. Enter the target quantity and confirm with **Yes**.

   The display `tOLEr` appears and **+** flashes.
3. Enter the upper tolerance in pieces and confirm with **Yes**.

   The display `tOLEr` appears and – flashes.
4. Enter the lower tolerance accordingly.

   The scale returns to weighing mode.

Note If a target quantity had already been saved under the selected memory location, the message `rEPLACE` appears in the display.

- To save the new target quantity, press **Yes** . The old target quantity is overwritten.
- To abort the save process, press **No**. The previous memory location assignment remains valid.

3.9.2 Calling up target quantities

➜ Enter the number of the memory location with the required target quantity (factory setting: 91 ... 100) and press **Mem** briefly.

The selected target quantity and the associated tolerances are loaded from the memory and appear briefly in the display.

3.9.3 Counting in to target quantities

1. Place the empty container on the scale and tare.
2. Specify a reference.
3. Fill the container with the material being counted.

The counting-in process can be followed in the graphic display. The 50 % marking is on the far left here, so that more display segments are available for precise filling between 50 % and 100 %.

As long as the lower tolerance is not reached, the minus tolerance mark is displayed.

If the counted-in number of pieces is within the defined tolerance, the mark **OK** is visible and a short beep sounds if activated in the menu.

When the plus tolerance mark appears, the number of pieces is above the permissible tolerance.

3.9.4 Clearing saved target quantities

1. Enter the number of the memory location with the target quantity to be cleared (factory setting: 91 ... 100) and press **Mem** briefly.

   The saved target quantity with tolerances is displayed.

2. Press **C** within 2 seconds.

   `CLEArED` briefly appears in the display. The saved target quantity is cleared.

3.10 Counting with two scales

For piece counting, it is possible to connect a second scale or weighing platform, e. g. a floor scale for counting a large number of pieces via the optional analog second scale interface.

The necessary settings for the application and interface parameters are described in the Sections 4.4.1, 4.6.1 and 4.6.4.

3.10.1 Counting with a reference scale

Prerequisite

The connected second scale is configured as reference scale.

1. Place the reference parts on the reference scale and press **Sample 10** or **Sample Size**.

   The scale determines the average piece weight and changes to the display in pieces (PCS).

2. Place the parts to be counted on the first scale.

   The total quantity is displayed.

Note

- If `tOtAL-Ct` -> `bULK` is set in the menu, only the number of pieces on the bulk scale is displayed.
- If `tOtAL-Ct` -> `bOtH` is set in the menu, the reference quantity is added to the bulk quantity.

3.10.2 Counting with a bulk scale

Prerequisite

The connected second scale is configured as bulk scale.

1. Place the reference parts on the first scale and press **Sample 10** or **Sample Size**.

   The scale determines the average piece weight and changes to the display in pieces (PCS).
2. Place the parts to be counted on the bulk scale.

   The total quantity is displayed.

Note

- If `tOtAL-Ct` -> `bULK` is set in the menu, only the number of pieces on the bulk scale is displayed on the bulk scale.
- If `tOtAL-Ct` -> `bOtH` is set in the menu, the reference quantity is added to the bulk quantity.

3.10.3 Counting with an auxiliary scale

Note This configuration allows counting of diverse parts, for example very small parts on one scale and large parts on the other scale.

Prerequisite

The connected second scale is configured as an auxiliary scale. The scale doesn't change automatically but only after pressing the **Scale Select** key.

1. Activate the appropriate scale.
2. Place the reference parts on this scale and press **Sample 10** or **Sample Size**.

   The scale determines the average piece weight and changes to the display in pieces (PCS).
3. Place the parts to be counted on the same scale.

   The number of pieces is displayed.

4 Settings in the menu

Settings can be changed and functions can be activated in the menu. This enables adaptation to individual weighing requirements.

The menu consists of 6 main blocks containing various submenus on several levels.

4.1 Operating the menu

4.1.1 Calling up the menu and entering the password

The menu differentiates between 2 operating levels: Operator and Supervisor. The Supervisor level can be protected by a password. When the device is delivered, both levels are accessible without a password.

Operator menu

1. Press **MENU** and keep it pressed until `COdE` appears.
2. Press **MENU** again.

   The menu item `tErMINL` appears. Only the submenu `dEVICE` is accessible.

Supervisor menu

1. Press **MENU** and keep it pressed until `COdE` appears.
2. Enter the password and confirm with **Yes**.

   The first menu item `SCALE` appears.

Note

No supervisor password has been defined when the device is first delivered. Therefore respond to the password inquiry with **MENU** when you call up the menu for the first time.

If a password has still not been entered after a few seconds, the scale returns to weighing mode.

Emergency password for Supervisor access to the menu

If a password has been issued for Supervisor access to the menu and you have forgotten it, you can still enter the menu:

➜ Press **ZERO** 3 times and confirm with **Yes**.

4.1.2 Selecting and setting parameters

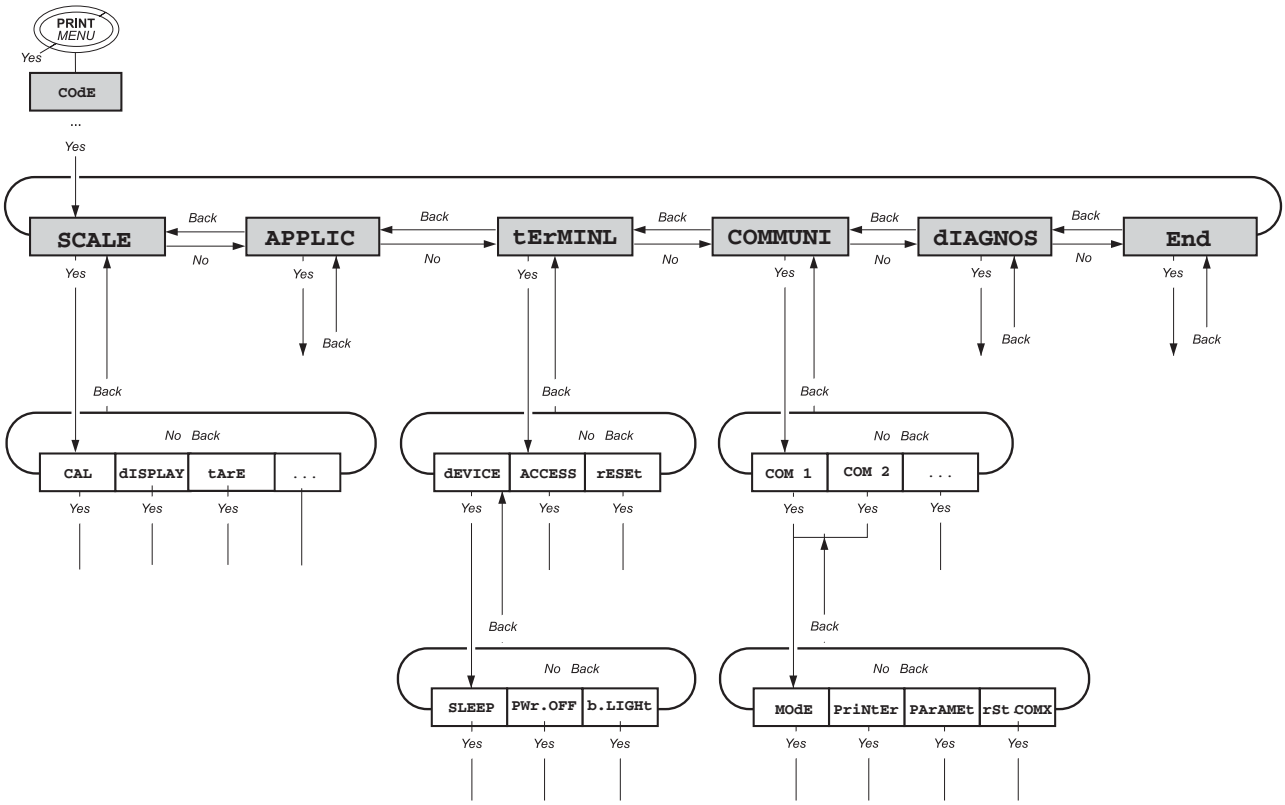

Scrolling on one level

➜ Scroll forward: Press **No**.

➜ Scroll back: Press **Back**.

Activating menu items/ accepting selection

➜ Press **Yes**.

Exiting menu

1. Press **Exit**.

   The last menu item END appears.
2. Press **Yes**.

   The inquiry SAVE appears.
3. Confirm inquiry with **Yes** to save the settings and return to weighing mode.

   -or-

➜ Press **No** to discard changes and return to weighing mode.

4.2 Overview

Level 1	Level 2	Level 3	Level 4	Level 5	Level 6	Page
SCALE	SCALE1/SCALE2					34
	CAL					34
	dISPLAY	UNIt1	g, kg, oz, lb, t			35
		UNIt2	g, kg, oz, lb, t			
		rESOLU				
		UNt.rOLL	ON, **OFF**			
	tArE	A-tArE	ON, **OFF**			35
		ChAIn.tr	**ON**, OFF			
		A.CL-tr	ON, **OFF**			
	ZErO	AZM	OFF; 0.5 d; 1 d; 2 d; 5 d; 10 d			35
	rEStArt	ON/**OFF**				35
	FILtEr	VibrAt	LOW, **MEd**, HIGH,			35
		PrOCESS	**UNIVEr**, dOSING			
		StABILI	FASt, **StAndrd**, PrECISE			
	FACt	tEMP	OFF, 1K, 2K, 3K, **5K**			36
		dAY.tIM	OFF, dAY, tIME			
	Min.WEiG	ON/OFF	ON, **OFF**			36
	rESEt	SUrE?				37
APPLIC	COUNt	VAr-SPL	ON, **OFF**			37
		SPL-qtY	Sq1 ... Sq5			
		Min.reFW	**OFF**, 97.5%, 99.0%, 99.5%			
		rEF OPt	**OFF**, AUtO			
		A-SMPL	ON, **OFF**			
		A.CL-APW	ON, **OFF**			
		ACCurCY	ON, **OFF**			
		tOtAL.Ct	**bULK**, bOth			
	ACCUMUL	Print	COM1, COM2	LOt.PrNt		38
				FIN.PrNt		
				SUMMArY		
		rEACH Z	ON, **OFF**			
	CHECKW	bEEPEr	ON, **OFF**			38
		SP.tOL-				
		SENd.MOd	CONtINU, StAbLE			

Level 1	Level 2	Level 3	Level 4	Level 5	Level 6	Page
	MEMOrY	CONFIG				39
		CLEAr.M	SUrE?			
	inFO.KEY	INFO 1 ... INFO 13	Not.USEd, PCS NEt, GrOSS, tArE, APW, HIGHrES, ACCurCY, n, G tOtAL, N tOtAL, PCS.tOtL, tArGEt, dAtE, timE			40
	AVErAGE	**OFF**, AUtO, MAnuAL				40
	rESEt	SUrE?				40
tERMINL	dEVICE	SLEEP	**OFF**, 1 min, 3 min, 5 min			41
		PWr OFF	**YES**, NO			
		b.LIGHt	ON, **OFF**			
		dAtE.tim	dAtE.FOr, dAtE, timE, AM.PM			
		bEEP	ON, **OFF**			
	ACCESS	SUPErVI				41
	rESEt	SUrE?				42
COMMUNI	COM 1/COM 2	MOdE	**Print**			42
			A.Print			
			CONtINU			
			dIALOG			
			CONt.OLd			
			dIAL.OLd			
			dt-b	GrOSS	ON, OFF	
				tArE	ON, OFF	
				nEt	ON, OFF	
			dt-G	GrOSS	ON, OFF	
				tArE	ON, OFF	
				nEt	ON, OFF	
			COnt-Wt			
			COnt-Ct			
			bArc.rd			
			2nd.dISP			
			rEF			
			bULK			
			AuXILIA			
			INST.PRN			

Level 1	Level 2	Level 3	Level 4	Level 5	Level 6	Page
		PriNtEr	tEmPLat	**StdArd**, tEMPLt1, tEMPLt2		43
			ASCi.Fmt	LINE.FMt	**MULtI** SINGLE	
				LENGtH	1 … 100	
				SEPArAt	, ;…	
				Add LF	0 … 9	
		PArAMEt	bAUd	300 … 38400		43
			PArItY	7 nonE, 8 nonE, 7 odd, 8 odd, **7 EVEN**, 8 EVEN		
			H.SHAKE	NO, **XONXOFF**, nEt 422, nEt 485		
			NEt.Addr	0 … 31		
			ChECSuM	ON, **OFF**		
			Vcc	ON, **OFF**		
		rSt.COMx	SUrE?			43
COMMUNI	OPtION	EtH.NEt *	IP.AddrS, SUbNEt, GAtEWAY			43
		USb *	USb tESt			43
		diGitAL *	IN 1 … 4	**OFF**, ZErO, tArE, Print, CLEAr, rEF 10, rEF n, SCALE, inFO, Unit, tOtAL+, tOtAL–		43
			OUT 1 … 4	**OFF**, StAbLE, bEL.Min, AbV.Min, bEL.tOL-, AbV.tOL+, GOOd, UndErLd, OVErLd, StAr		
		ANALOG	Mode	**rEF**, bULK, AuXILIA, bYPASS		43
	dEF.PrN	tEMPLt1/ tEMPLt2	LINE 1 … LINE 20	**NOt.USEd**, HEAdEr, dAte, timE, Id1, Id2, SCALE.NO, GrOSS, tArE, nEt, APW, rEF Ct, PCS, tArGEt, dEVIAt, ACC NEt, ACC GrS, ACC PCS, ACC LOt, StArLN, CrLF, F FEEd		45

* Options not available at this time.

Level 1	Level 2	Level 3	Level 4	Level 5	Level 6	Page
dIAGNOS	tESt SC	intErN/ExtErN				46
	KboArd					
	dISPLAY					
	SNr					
	SNr2					
	LiSt					
	LiSt2					
	LiSt.M					
	WOrK.tim	timE	SHOW.tIM			
		WEIGH	SHOW.WGH			
	rESEt.AL	SUrE?				

4.3 Scale settings (SCALE)

4.3.1 SCALE1/SCALE2 – Selecting scale

This menu item only appears if an analog second scale or a weighing platform is connected.

4.3.2 CAL – calibration (adjustment)

This menu item is not available for certified scales.

External	For scales **without** an internal calibration weight: 1. Unload scale. 2. Activate menu item CAL with **Yes**. The scale determines the zero point. –0– appears in the display. The calibration weight to be placed on the scale then flashes in the display. 3. If necessary, change the weight value displayed with **No**. 4. Place the calibration weight on the scale and confirm with **Yes**. The scale calibrates with the calibration weight loaded. After calibration is completed, –donE– appears briefly in the display, and the scale automatically returns to weighing mode.

4.3.3 DISPLAY – weighing unit and display accuracy

UNIt1	Select weighing unit 1: g, kg, oz, lb, t
UNIt2	Select weighing unit 2: g, kg, oz, lb, t
rESOLU	Select readability (resolution), model-dependent
UNt.rOLL	When `UNT.rOLL` is switched on, the weight value can be displayed in all available units and as pieces with **Count Weight**.
Notes	• On certified scales, resolutions that deviate from the scale definition are displayed without a weighing unit and with the symbol *****. • On dual-range/dual interval scales, resolutions marked with **I<–> 1/2I** are divided up into 2 weighing ranges / intervals, e.g. 2 x 3000 d.

4.3.4 TARE – tare function

A-tArE	Switching on/off automatic taring
CHAIn.tr	Switching on/off chain tare
A.CL-tr	Switching on/off automatic taring with automatic clearing of the tare weight when the load is removed from scale

4.3.5 ZERO – automatic zero update

AZM	On certified scales, this menu item does not appear. Switching on/off automatic zero update and selecting zeroing range. Possible settings: OFF; 0.5 d; 1 d; 2 d; 5 d; 10 d

4.3.6 RESTART – automatic saving of zero point and tare value

ON/OFF	When the Restart function is activated, the last zero point and tare value are saved. After switching off / on or after a power interruption, the device continues to work with the saved zero point and tare value.

4.3.7 FILTER – adaptation to the ambient conditions and the weighing type

VIbrAt	Adaptation to the ambient conditions
`LOW`	• Very steady and stable environment. The scale works very quickly, but is very sensitive to external influences.
`MEd`	• Normal environment. The scale operates at medium speed.
`HIGH`	• Restless environment. The scale works more slowly, but is insensitive to external influences.

PrOCESS	Adaptation to the weighing process
UNIVEr	• Universal setting for all weighing samples and normal weighing goods
dOSING	• Dispensing liquid or powdery weighing samples
StAbILI	Adjusting the weighing speed
FASt	• The scale operates very fast.
StAndrd	• The scale operates at medium speed.
PrECISE	• The scale operates with the greatest possible reproducibility. The slower the scale works, the greater the reproducibility of the weighing results.

4.3.8 MIN.WEIG – minimum weight

This menu item appears only if the service technician has saved a minimum weight.

ON/OFF	Switching minimum weight function on/off If the weight on the scale falls below the stored minimum weight, an * appears on the display in front of the weight indicator.

4.3.9 RESET – resetting scale settings to factory settings

SUrE?	Confirmation inquiry • Reset the scale settings to factory settings with **Yes** • Do not reset scale settings with **No**

4.4 Application settings (APPLICATION)

4.4.1 COUNT – settings for counting

VAr-SPL	Adaptation of the reference quantity
ON	• The reference quantity can be changed in operating mode
OFF	• Counting only with defined reference quantities
Min.reFW	Monitoring the minimum reference weight
OFF	• No monitoring of the minimum reference weight
97.5, 99.0, 99.5	• Monitoring the minimum reference weight so that a counting accuracy of 97.5 %, 99.0 % or 99.5 % is achieved
rEF.OPt	Optimizing the average piece weight
OFF	• No reference optimization
AUtO	• Automatic reference optimization
A-SMPL	Automatic determination of the average piece weight
ON	• After taring, the average piece weight is determined with the next weight placed on the scale and the displayed reference quantity
OFF	• No automatic determination of the average piece weight
A.CL-APW	Automatic clearing of the average piece weight
ON	• When the load is taken off the scale after a counting operation, the average piece weight is automatically cleared. The next counting operation begins with determining the average piece weight again.
OFF	• The average piece weight must be cleared manually by pressing **C**
ACCurCY	Displaying the counting accuracy
ON	• After the average piece weight is determined, the counting accuracy that can be achieved is shown briefly in the display.
OFF	• No counting accuracy display
tOtAl.Ct	Counting on two scales
bULK	• Display number of pieces for the parts on the bulk scale only
bOth	• Display number of pieces for all parts on the bulk and the reference scale

4.4.2 ACCUMULATION – totalising

PrINt	Configure printout for accumulation
COM 1/COM 2	Select interface for the connected printer / computer
LOt.PrINt	• Printout for each individual item
FIN.PrINt	• Printout only at the end of accumulation
SUMMArY	• Additional printout of the individual items after completion of accumulation
rEACH Z	Reach a stable zero point between two items
ON	• All load must first be removed from the scale before accumulation of the next item is possible
OFF	• No load removal requested between two items

4.4.3 CHECKWEIGHING

bEEPEr	Setting the beep for checkweighing
ON	• A short beep sounds when the target value is reached
OFF	• No beep
SP.tOL-	Limit for activation of the I/O relay box. The value to be entered is the percentage proportion of the lower tolerance of the target weight / target quantity. EXAMPLE Target weight:2000 g tOLER+:2010 g tOLER-:1990 g SP.tOL-:010 (%) The relay box is not activated until 199 g (= 10 % of 1990 g) is reached.
SENd.MOd	Defines the form in which the scale sends information to the I/O relay box
CONtINU	• Information is permanently sent
StAbLE	• Information is only sent if the weight value is stable

4.4.4 MEMORY – configuring memory

CONFIG	Configuring the memory partitions.
40-40-10	Ranger RP have a total of 100 memory localizations that can be assigned to tare values, average piece weights, target weights and target quantities. Factory settings: • 40 memory locations for tare values (01-40) • 40 memory locations for average piece weights (41-80) • 10 memory locations with target weights (81-90) • 10 memory locations with target quantities (91-100) The first target weight is called up e.g. with memory address No. 81. Changing the range for the memory locations: 1. Enter the new range and separate each range with a point (e. g. 30.30.20). The last range is automatically calculated. If an invalid entry is made, NOt.ALLO is shown in the display. 2. Confirm with **Yes**. Since only some of the entered values can be shown in the display, the display can be moved to the right with the aid of the **No** key. **Note** ➜ After every new partitioning, always check the memory values and adjust if necessary!
CLEAr.M	Clearing all memories.

4.4.5 INFO-KEY – assignment of the Info key

INFO1	Up to 13 additional values can be displayed via the key **Info**.
NOt.USEd	• Info space not occupied
PCS NEt	• Displays net weight in counting
GrOSS	• Displays gross weight
tArE	• Displays tare weight
APW	• Displays average piece weight
HIGHrES	• Shows display with a higher resolution
ACCUrCY	• Displays counting accuracy
n	• Displays number of totalised items
G tOtAL	• Displays gross sum
N tOtAL	• Displays net sum
PCS.tOtL	• Displays sum of pieces
tArGEt	• Displays target value and tolerances
dAtE	• Displays date
timE	• Displays time
INFO2 ... INFO13	As per INFO1

4.4.6 AVERAGE – determining the average weight for an unstable load

OFF	Calculating average weight switched off
AUtO	Calculating average weight with automatic start of the weighing cycle
MAnuAL	Calculating average weight with manual start of the weighing cycle via **PRINT**

4.4.7 RESET – resetting application settings to factory settings

SUrE?	Confirmation inquiry • Reset the application settings to factory settings with **Yes** • Do not reset the application settings with **No**

4.5 Terminal settings (TERMINAL)

4.5.1 DEVICE – Sleep mode, energy-saving mode and display backlighting

SLEEP	This menu item only appears on devices in mains operation. When SLEEP is activated, the scale switches off display and backlighting after the time period set when not in use. The display and backlighting are switched on again at the press of a key or if the weight changes. Possible settings: OFF, 1 min, 3 min, 5 min
PWr OFF	This menu item only appears on devices in battery operation. When PWr OFF is activated, the device switches itself off automatically after approx. 3 minutes when not in use.
b.LIGHt	Switching the display backlighting on/off. On scales with a battery, the background lighting switches itself off automatically if there has been no activity on the scale for 5 seconds.
DAtE.tim	Setting date and time
DAtE.FOr	• Select type of date setting: EU or US
DAtE	• Enter the date in the selected format
tIME	• Enter the time
AM.PM	• Select AM/PM
bEEP	Switching beep on/off
ON	Switching on beep on each key press
OFF	Switching off beep on each key press
Note	This menu item is accessible without a Supervisor password.

4.5.2 ACCESS – password for Supervisor menu access

SUPErVI	Password entry for Supervisor menu access
ENtER.C	Request to enter password ➜ Enter the password and confirm with **Yes**
rEtYPE.C	Request to repeat the password entry ➜ Enter the password again and confirm with **Yes**
Notes	• The password can consist of up to 4 characters. • The key **Yes** must not be part of the password. It is required for confirming the password. • The key **No** may only be used in combination with another key. • If you enter an impermissible code or make a typing error in the repetition, COdE.Err. appears in the display.

4.5.3 RESET – resetting terminal settings to the factory settings

SUrE?	Confirmation inquiry • Reset terminal settings to the factory settings with **Yes** • Do not reset the terminal settings with **No**

4.6 Configuring interfaces (COMMUNICATION)

4.6.1 COM1/COM2 -> MODE – operating mode of the serial interface

Print	Manual data output to the printer with **PRINT**
A.Print	Automatic output of stable results to the printer (e. g. for series weighing operations)
CONtINU	Ongoing output of all weight values via the interface
dIALOG	Bi-directional communication via OHAUS or MT-SICS commands, control of the scale via PC
CONt.OLd	As per CONtINU, see above, but with 2 fixed blanks in front of the unit (compatible with Spider 1/2/3)
dIAL.OLd	As per dIALOG, see above, but with 2 fixed blanks in front of the unit (compatible with Spider 1/2/3)
dt-b GROSS tArE nEt	DigiTOL-compatible format. • Transfer of the gross weight, identified with "G" • Transfer of the tare weight • Transfer of the net weight
dt-G	As per dt-b, see above, gross weight identified with "G"
COnt-Wt	TOLEDO Continuous mode
COnt-Ct	TOLEDO Continuous mode, transfer of the number of pieces
bArc.rd	For connecting a serial bar code reader (automatically activates the 5-V voltage supply at Pin 9)
2nd.dISP	For connecting a second display (automatically activates the 5-V voltage supply at Pin 9)
rEF	Data transfer from the reference scale (automatic switchover)
bULK	Data transfer from the quantity scale (automatic switchover)
AuXILIA	Data transfer from the reference or quantity scale (manual switchover)
INST.PRN	Manual data output (stable or unstable) to the printer with **PRINT**.

4.6.2 COM1/COM2 -> PRINTER – settings for protocol printout

This menu item only appears if the mode "Print" or "A.Print" is selected.

tEmPLat	Selecting protocol printout
StdArd	• Standard printout
tEmPLt1	• Printout in accordance with Template 1
tEmPLt2	• Printout in accordance with Template 2
ASCi.FmtT	Selecting formats for the protocol printout
LINE.Fmt	• Line format: MULtI (multi-line) or SINGLE (single-line)
LENGtH	• Line length: 0 ... 100 characters, appears only with line format MULtI
SEPArAt	• Separator: , ; . / \ _ and space; appears only with line format SINGLE
Add LF	• Line feed: 0 ... 9

4.6.3 COM1/COM2 -> PARAMET – communication parameter

bAUd	Selecting baud rate: 300, 600, 1200, 2400, 4800, 9600, 19200, 38400 baud
PAritY	Selecting parity: 7 none, 8 none, 7 odd, 8 odd, 7 even, 8 even
H.SHAKE	Selecting Handshake: NO, XONXOFF, nEt422, nEt485 (network operation as per RS485 standard via the optional RS422/RS485 interface, only for COM1)
NET.Addr	Assigning network address: 0 ... 31, only for NET 485
ChECSuM	Activating checksum byte (appears only in TOLEDO Continuous mode)
Vcc	Switching 5V voltage, e.g. for a bar code reader, on / off

4.6.4 COM1/COM2 -> RESET COM1/RESET COM2 – resetting serial interface to factory settings

SUrE?	Confirmation inquiry • Reset interface settings to factory settings with **Yes** • Do not reset the interface settings with **No**

4.6.5 OPTION – configuring options

If no option is installed or is not yet configured, N.A. appears in the display.

ANALOG	Configuration of the analog second scale interface
Mode	Operating mode of the second scale
rEF	• Second scale can only be used to determine the average piece weight
bULK	• Second scale can only be used as bulk scale
AuXILIA	• No difference between reference and bulk scale, all functions available on the scale selected
BYPASS	• Second scale interface not assigned

4.6.6 DEF.PRN – configuring templates

tEMPLt1/tEMPLt2	Selecting Template 1 or Template 2
LINE 1 ... 20	Select line
NOt.USEd	• Line not used
HEAdEr	• Line as header. The contents of the header must be defined via an interface com-* mand, see Section 5.1.
dAtE	• Date
timE	• Time
SCALE.NO	• Scale number
GROSS	• Gross weight
tArE	• Tare weight
nEt	• Net weight
APW	• Average piece weight
rEF Ct	• Reference quantity
PCS	• Pieces
tArGEt	• Target value
dEVIAt	• Deviation from the target value
ACC.NEt	• Totalised net weight
ACC.GrS	• Totalised gross weight
ACC.PCS	• Totalised number of pieces
ACC.LOt	• Totalised no. of items
StARLN	• Line with
CrLF	• Line feed (blank line)
F FEEd	• Page feed

4.7 Diagnosis and printing out of the menu settings (DIAGNOS)

`tESt SC` Internal	Testing scale with internal calibration weight • `-Int CAL-` appears in the display during the test. • After completion of the test, ideally `*d=0.0g` briefly appears in the display, after which the scale changes to the next menu item `KboArd`.
External	Testing scale with external calibration weight 1. The scale checks the zero point. `-0-` appears in the display. The test weight flashes in the display. 2. If necessary, change the weight value displayed with **No**. 3. Put the calibration weight on the scale and confirm with **Yes**. 4. The scale checks the calibration weight put on them. 5. After the test is completed, the deviation from the last calibration briefly appears in the display, ideally `*d=0.0g`, after which the scale changes to the next menu item `KboArd`.
`KboArd` `PUSH 1 ... 25`	Keyboard test • Press the keys in the following order: 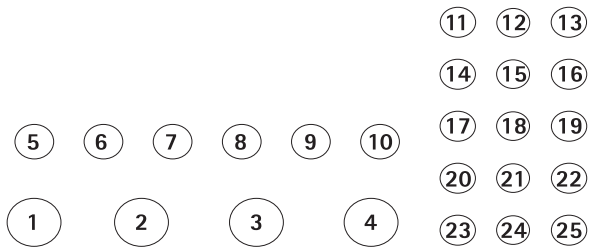 If the key works, the scale changes to the next key. **Note** You cannot abort the keyboard test! If you have selected the menu item `KboArd`, you must press all keys.
`dISPLAY`	Display test: The scale displays all functioning segments
`SNr`	Display of the serial number
`SNr2`	Display of the serial number of scale 2. This menu item only appears if an analog second scale is connected.
`LiSt`	Printout of a list of all menu settings
`LiSt2`	Printout of a list of all menu settings of scale 2. This menu item only appears if an analog second scale is connected.
`LiSt.M`	Printout of a list of all values and settings in the memory

WOrK.tim timE SHOW.tim WEIGH SHOW.WGH	Display of the operating time of the scale and the number of weighing operations performed • Operating time in hours, e.g. 56 h • Number of weighing operations, e. g. 135
rESEt.AL SUrE?	Resetting all menu settings to the factory settings Confirmation inquiry • Reset all menu settings to the factory settings with **Yes** • Do not reset the menu settings with **No**

5 Interface description

5.1 OHAUS interface commands

The Ranger RD scales support the OHAUS command set. With OHAUS commands,= it is possible to configure, query and operate the scale from a PC.=

5.1.1 Available OHAUS commands

Command	Meaning
OS =	Set to print weight value immediately (stable or unstable) after P command=
1S =	Set to print stable weight value after P command=
SA =	Set to print stable weight value automatically=
CA =	Set to print weight value continuosly=
xA =	Set to print weight value at specified interval, where x = 1 to 3600 (seconds)=
P =	Print displayed weight value=
Z =	Zero the scale=
T =	Tare the scale=
xT =	Define the Preset Tare, where x = tare weight in grams=
H x "y" =	Define the Header H<space>x<space>"y", where x = 1, 2, 3, 4, 5 (line number) = and "y" = header text in quotes (up to 24 characters).=
PSI =	Change to MT-SICS command set=
POH =	Return to OHAUS command set=

NOTE: All commands must be followed by a carriage return, line feed <CR><LF>=

5.1.2 Requirements for communication between scale and PC

- The scale must be connected to the RS232 interface of a PC with a suitable cable.
- The interface of the scale must be set to "Dialog" mode, see Section 4.6.1.
- A terminal progam must be available on the PC, e.g. HyperTerminal.
- The communication parameters baud rate and parity must be set in the terminal program and on the scale to the same values, see Section 4.6.3.

4.1.4 Output format

Response to the P command																				
Field																				
1	**2**		**3**							**4**	**5**		**6**	**7**	**8**	**9**			**10**	
POL	SP	SP	W	W	W	W	W	W	W	SP	UN	UN	SP	ST	SP	N	N	N	CR	LF

Field 1: POL = polarity, space if positive, - if negative
Fields 2, 4, 6, 8: SP = space
Field 3: W = weight up to 6 digits plus the decimal point
Field 5: UN = unit of measure 1 or 2 characters
Field 7: ST = stability status, space when stable, ? when unstable,
Field 9: N = NET or B/G
Field 10: CR LF = carriage return, line feed

Response to the Print key																														
Line	**Field**																													
	1							**2**	**3**																					
1	S	C	A	L	E	:	SP	SC	CR	LF																				
	1	**2**														**3**	**4**							**5**	**6**			**7**	**8**	**9**	
2	G	SP	SP	SP	SP	SP	SP	SP	SP	SP	SP	SP	SP	SP	SP	POL	W	W	W	W	W	W	W	SP	UN	UN	SP	ST	CR	LF
3	T	SP	SP	SP	SP	SP	SP	SP	SP	SP	SP	SP	SP	SP	SP	POL	W	W	W	W	W	W	W	SP	UN	UN	SP		CR	LF
4	N	SP	SP	SP	SP	SP	SP	SP	SP	SP	SP	SP	SP	SP	SP	POL	W	W	W	W	W	W	W	SP	UN	UN	SP	ST	CR	LF

Line 1
Field 1: SCALE:SP = heading and space
Field 2: SC = scale identifier, 1 = scale 1, 2 = scale 2
Field 3: CR LF = carriage return, line feed

Lines 2, 3, 4
Field 1: G = Gross, T = Tare, N = Net
Field 2: SP = space, up to 13
Field 3: POL = polarity, space if positive, - if negative
Field 4: W = weight, up to 6 digits plus the decimal point
Field 5, 7: SP = space
Field 6: UN = unit of measure, 1 or 2 characters
Field 8: ST = stability status, space when stable, ? when unstable, does not apply to Line 3
Field 9: CR LF =:carriage return, line feed

5.2 SICS interface commands

The Ranger RP compact scales support the command set MT-SICS (METTLER TOLEDO **S**tandard **I**nterface **C**ommand **S**et). With SICS commands, it is possible to configure, query and operate the scales from a PC. SICS commands are divided up into various levels.

To use the MT-SICS commands, first send the OHAUS command PSI. To return to the OHAUS command set, send the OHAUS command POH.

5.2.1 Available SICS commands

	Command	Meaning
LEVEL 0	@	Reset the scale
	I0	Inquiry of all available SICS commands
	I1	Inquiry of SICS level and SICS versions
	I2	Inquiry of scale data
	I3	Inquiry of scale software version
	I4	Inquiry of serial number
	S	Send stable weight value
	SI	Send weight value immediately
	SIR	Send weight value repeatedly
	Z	Zero the scale
	ZI	Zero immediately
LEVEL 1	D	Write text into display
	DW	Weight display
	K	Keyboard check
	SR	Send and repeat stable weight value
	T	Tare
	TA	Tare value
	TAC	Clear tare
	TI	Tare immediately

	Command	Meaning
LEVEL 2	C2	Calibrate with the external calibration weight
	C3	Calibrate with the internal calibration weight
	I10	Inquire or set scale ID
	DAT	Inquire or set current date
	I11	Inquiry of scale type
	P100	Print out on the printer
	P101	Print out stable weight value
	P102	Print out current weight value immediately
	PWR	Power On/Off
	SIRU	Send weight value in the current unit immediately and repeat
	SIU	Send weight value in the current unit immediately
	SNR	Send stable weight value and repeat after every weight change
	SNRU	Send stable weight value in the current unit and repeat after every weight change
	SRU	Send weight value in the current unit and repeat
	ST	After pressing the Transfer key, send the stable weight value
	SU	Send stable weight value in the current unit
	TIM	Inquire or set the time
	TST2	Start test function with external weight
	TST3	Start test function with internal weight
LEVEL 3	I12	ID1
	I13	ID2
	PW	Average piece weight
LEVEL SPECIAL	CLR	Clear
	DS	Short beep
	I31	Header for the printout
	ICP	Send configuration of the printout
	LST	Send menu settings
	M01	Weighing mode
	M02	Stability setting
	M03	Autozero function
	M19	Send calibration weight
	M21	Inquire/set weight unit
	P	Print text
	P130	Weight value, unit and price
	PCS	Number of pieces

	Command	Meaning
	PM	Set values for checkweighing
	PRN	Print out at every printer interface
	REF	Average piece weight
	RST	Restart
	SFIR	Send weight value immediately and repeat quickly
	SIH	Send weight value immediately in high resolution
	SWU	Switch weight unit
	SX	Send stable data record
	SXI	Send data record immediately
	SXIR	Send data record immediately and repeat
	U	Switch weight unit

5.2.2 Requirements for communication between scale and PC

- The scale must be connected to the RS232, RS485, USB or Ethernet interface of a PC with a suitable cable.
- The interface of the scale must be set to "Dialog" mode, see Section 4.6.1.
- A terminal progam must be available on the PC, e.g. HyperTerminal.
- The communication parameters baud rate and parity must be set in the terminal program and on the scale to the same values, see Section 4.6.3.

5.2.3 Notes on network operation via the optional interface RS422/485

Up to 32 scales can be networked with the optional RS422/485 interface. In network operation, the scales must be addressed from the computer before commands can be sent and weighing results received.

Description of the steps	Host	Direction	Scale
1. Host addresses the scale, e.g. with the address 3A hex.	<ESC> 3A	——>	
2. Host sends a SICS command, e.g. SI	SI <CRLF>	——>	
3. The scale confirms receipt of the command and sends the address back		<——	<ESC> 3A
4. The scale responds to the command and returns control of the bus to the host		<——	S_S____45.02_kg <CRLF>

5.3 TOLEDO Continuous mode

5.3.1 TOLEDO Continuous commands

The scale supports the following input commands in TOLEDO Continuous mode:

Command	Meaning
P <CR><LF>	Print out the current result
T <CR><LF>	Tare the scale
Z <CR><LF>	Zero the display
C <CR><LF>	Clear the current value
Tx.xxx <CR><LF>	Define tare

5.3.2 Output format in TOLEDO Continuous mode

Weight values are always sent in the following format in TOLEDO Continuous mode:

	Status			**Field 1**						**Field 2**							
1	**2**	**3**	**4**	**5**	**6**	**7**	**8**	**9**	**10**	**11**	**12**	**13**	**14**	**15**	**16**	**17**	**18**
STX	SWA	SWB	SWC	MSD	–	–	–	–	LSD	MSD	–	–	–	–	LSD	CR	CHK

Field 1	6 digits for the weight value that is sent without a decimal point and unit
Field 2	6 digits for the tare weight that is sent without a decimal point and unit
STX	ASCII characters 02 hex, characters for "start of text"
SWA, SWB, SWC	Status words A, B, C, see below
MSD	Most significant digit
LSD	Least significant digit
CR	Carriage Return, ASCII characters 0D hex
CHK	Checksum (2-part complement of the binary sum of the 7 lower bits of all previously sent characters, incl. STX and CR)

Status word A								
		Status Bit						
Function	**Selection**	**6**	**5**	**4**	**3**	**2**	**1**	**0**
Decimal position	X00	0	1			0	0	0
	X0					0	0	1
	X					0	1	0
	0.X					0	1	1
	0.0X					1	0	0
	0.00X					1	0	1
	0.000X					1	1	0
	0.0000X					1	1	1
Numerical increment	X1			0	1			
	X2			1	0			
	X5			1	1			

Status word B	
Function / value	**Bit**
Gross / net: Net = 1	0
Sign: Negative = 1	1
Overload = 1	2
Movement = 1	3
lb/kg: kg = 1	4
1	5
Powerup = 1	6

Status word C	
Function / value	**Bit**
0	0
0	1
0	2
Print request = 1	3
Extended = 1	4
1	5
Manual taring, only kg = 1	6

6 Event and error messages

Error	Cause	Remedy
Display Dark	• Back lighting set too dark • No mains voltage • Unit switched off • Mains cable not plugged in • Brief fault	➜ Set back lighting (`b.LIGHt`) brighter ➜ Check mains ➜ Switch on unit ➜ Plug in mains plug ➜ Switch device off and back on again
Insufficient load L - - - - J	• Load plate not on the scale • Weighing range not reached	➜ Place load plate on the scale ➜ Set to zero
Overload r - - - - ˥	• Weighing range exceeded	➜ Unload scale ➜ Reduce preload
- - - - - -	• Result not yet stable	➜ If necessary adjust vibration adapter or weigh dynamically
- - no - -	• Function not permissible	➜ Unload scale and set to zero
r - no - ˥ L - no - J	• Zeroing not possible with overload or insufficient load	➜ Unload scale
Err 4	• Average piece weight too low	➜ Select and place larger number of reference parts on the scale
Err 5	• No valid value from the reference scale	➜ Check cable connection between the units ➜ Check interface settings
Err 6	• No calibration	➜ Unplug the mains plug then plug it back in; switch unit off and then back on in battery mode ➜ Calibrate scale ➜ Call OHAUS Service
Err 7	• Average piece weight too low	➜ Counting is not possible on this scale with this average piece weight

Error	Cause	Remedy
Err 9	• Unstable weight value when referencing	➜ Ensure stable surroundings ➜ Ensure that the weighing pan is freely movable ➜ Adjust vibration adapter
Err 14	• Impermissible target value or impermissible tolerance	➜ Repeat input with permissible values
Err 15	• Setting the average piece weight impermissible during weight accumulating	➜ End weight accumulating ➜ Reset average piece weight
Err 16	• Switching the weighing unit impermissible during weight accumulating	➜ End weight accumulating ➜ Switch weighing unit
Err 17	• Printout not yet ended	➜ End printout ➜ Repeat required action
Err 18	• Switching the weighing unit impermissible during dynamic weighing	➜ End dynamic weighing ➜ Switch weighing unit
Err 53	• EAROM checksum error	➜ Unplug the mains plug then plug it back in; switch unit off and then back on in battery mode ➜ Call OHAUS Service
Weight display unstable	• Restless installation location • Draft • Restless weighing sample • Contact between weighing pan and/or weighing sample and surroundings • Mains fault	➜ Adjust vibration adapter ➜ Avoid drafts ➜ Dynamic weighing ➜ Remedy contact ➜ Check mains
Incorrect weight display	• Incorrect zeroing • Incorrect tare value • Contact between weighing pan and/or weighing sample and surroundings • Scale tilted	➜ Unload scale, set to zero and repeat weighing operation ➜ Clear tare ➜ Remedy contact ➜ Level scale

7 Technical data and accessories

7.1 Technical data

7.1.1 Type key

The Ranger RP are available with various capacities and platforms that can be seen from the complete type designation.

Example

RP6RS	compact scale with capacity **6 kg** and **small platform**
RP35LM	compact scale with capacity **35 kg** and **large platform**
RP3SM	compact scale with capacity **3 kg** and **extra-small platform**

7.1.2 General data

RP..S, RP..M	
Applications	• Weighing • Dynamic weighing • Counting with fixed or variable reference quantity • Counting with reference and bulk scale • Accumulating • Numerical definition of tare weights, average piece weights and reference quantities • 100 memory locations for tare weights, average piece weights, target weights and target quantities • Checkweighing and weighing-in to target weight/target quantity
Settings	• Resolution selectable • Weighing unit selectable: g, kg, oz, lb, t • Taring function: manual, automatic, chain tare • Automatic zero point correction when the scale is switched on and during operation • Filter for adapting to the ambient conditions (vibration adapter) • Filter for adapting to the weighing type, e.g. dispensing (weighing process adapter) • Switch-off function, sleep mode for mains-operated devices, energy-saving mode for battery operation • Display lighting • Add mode for determining the piece weight when counting • Reference optimization • Programmable memories and identifications • Date and time • Signal tone • Graphic display of the weighing range
Accuracy class OIML/NTEP	• RP..S III • RP..M II
Display	• LCD (liquid crystal display), digits 16 mm high, with back lighting
Keypad	• Pressure point membrane keypad • Scratch-proof labeling
Housing	• Diecast aluminum housing; chromium nickel steel weighing pan • Dimensions, see Page 59
Protection Class (IEC 529, DIN 40050, EN60529)	• IP43

RP..S, RP..M		
Mains connection	Direct connection to the mains (MAINS supply voltage fluctuations up to ±10% of the nominal voltage): • 230 V, 50 Hz, 70 mA • 240 V, 50 Hz, 70 mA • 120 V, 60 Hz, 90 mA • 100 V, 50/60 Hz, 90 mA For battery operation: • Connection via mains adapter: 90 – 264 V, 47 – 63 Hz, 300 mA • Infeed on the unit: 24 V, 1.3 A	
Battery operation	If the voltage supply is interrupted, the unit automatically switches over to battery operation	
Ambient conditions	• Use	Indoor use only
	• Altitude	up to 2000 m
	• Temperature range RP..S	–10 .. +40 °C / 14 .. 104 °F
	• Temperature range RP..M	+10 .. +30 °C / 50 .. 86 °F
	• Overvoltage category	II
	• Contamination level	2
	• Relative humidity	Maximum relative humidity 80 % for temperatures up to 31 °C / 88 °F, decreasing linearly to 50 % relative humidity at 40 °C / 104 °F
Interfaces	• 1 RS232 interface integrated • 1 other optional interface possible	
Resolution of the analog second scale interface	• 300000 points in noncertified configuration • 7000 points in certified configuration	
Supply of the weighing cell	• 8.2 V	

Standard Resolution Models (EU Only)				
	RP3RD	**RP6RD**	**RP15R/LD**	**RP35LD**
Cap x Read Default	3kgx0.0001kg	6kgx0.0002kg	15kgx0.0005kg	35kgx0.001kg
	3kgx0.1g	6kgx0.2g	15kgx0.5g	35kgx1g
Cap x Read EC Certified	1.5/3kgx0.5/1g	3/6kgx1/2g	6/15kgx2/ 5g	15/35kgx5/10g

High Resolution Models (EU Only)				
	RP3SM	**RP6S/RM**	**RP15LM**	**RP35LM**
Cap x Read Default	600g/3.1kgx0.01g/0.1g	1.2/6.1kgx 0.01/0.1g	3.5/15.1kgx0.1/1g	7/35.1kgx0.1/1g
Cap x Read EC Certified			3.5/15.1kgx0.1/1g	7/35.1kgx0.1/1g

High Resolution Models				
	RP3RM	**RP6RM**	**RP15LM**	**RP35LM**
Capacity x Readability Default	6.61388x0.00002lb	13.22770x.00005lb	33.0694x0.0001lb	77.1620x0.0002lb
	105.8228x0.0002oz	211.6440x0.0005oz	529.110x0.002oz	1234.592x0.002oz
	3x0.00001kg	6x0.00002kg	15.00000x0.00005kg	35x0.0001kg
	3000x.01g	6000x0.02g	15,000.00x0.05g	35,000.0x0.1g
Capacity x Readability NTEP Certified	6x0.0001lb	12.0000x0.0002lb	30.000x0.001lb	70.000x0.002lb
	3.00000x.00005kg	6.0000x0.0001kg	15.0000x0.0005kg	35.0000x0.001kg

7.1.5 Dimensions

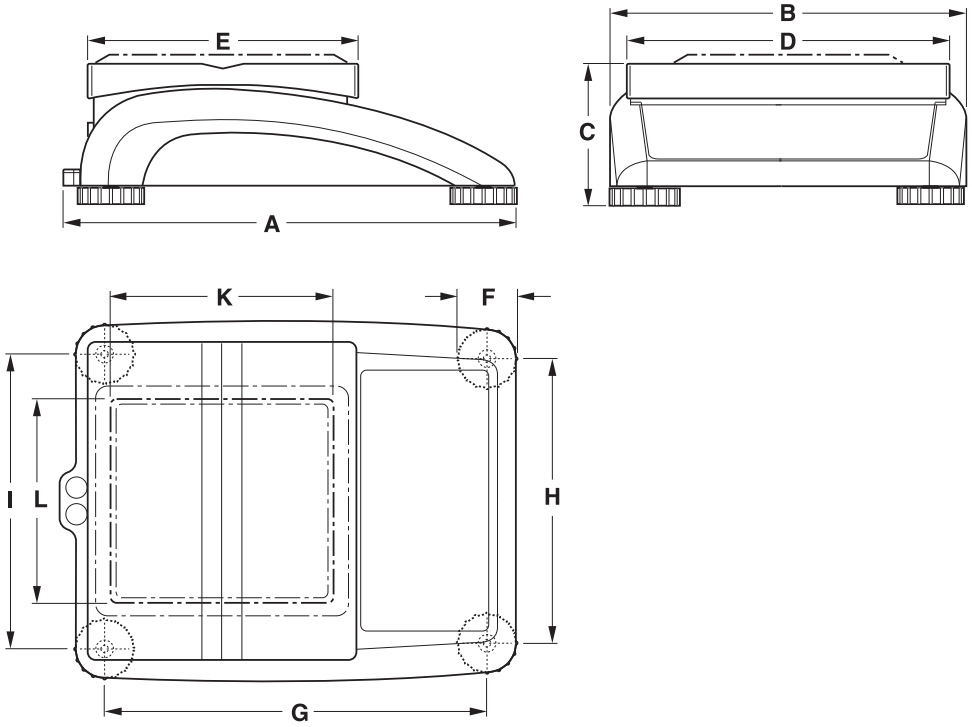

	A	B	C	D	E	F	G	H	I	K	L
RP…S	335mm 13.1in	265mm 10.4in	100mm 3.9in	240mm 9.4in	200mm 7.8in	46mm 1.8in	276mm 10.8in	208mm 8.1in	216mm 8.5in	165mm 6.4in	165mm 6.4in
RP...R	335mm 13.1in	265mm 10.4in	100mm 3.9in	240mm 9.4in	200mm 7.8in	46mm 1.8in	276mm 10.8in	208mm 8.1in	216mm 8.5in	-	-
RP…L	370mm 14.5in	360mm 14.1in	115mm 4.5in	350mm 13.7in	240mm 9.4in	52mm 2.0in	310mm 12.2in	304mm 11.9in	310mm 12.2in	-	-

7.1.6 Weights

Model	W/O Battery	W/Battery	W/ Incal
RP..RS	4.6kg / 10.1lb	5.3kg /11.6lb	-
RP..LS	8.2kg /18lb	8.9kg /19.6lb	-
RP..SM	4.9kg / 10.8lb	5.6kg /12.3lb	5.4kg /11.9lb
RP..RM	4.7kg /10.3lb	5.4kg /11.9lb	5.2kg /11..4lb
RP..LM	10.5kg /23.1lb	11.2kg /24.6	11.7kg /25.7lb

7.1.7 Interface connections

The compact scale can be fitted with a maximum of 2 interfaces. The following combinations are possible:

COM1	COM2	Note
RS232	–	
RS232	RS232	
RS232	Analog second scale interface	

7.1.8 Assignment of the interface connections

Pin	RS232 (COM1/ COM2)	Analog Interface
1	–	+ Excitation (+8.2 VDC)
2	TxD1/2	+ Sense
3	RxD1/2	Shield
4	–	– Sense
5	GND	– Excitation (GND)
6	–	
7	–	+ Signal
8	–	– Signal
9	VCC	–

7.2 Accessories

Designation	Order Number
In Use Cover for RP..R..	21203719
In Use Cover for RP..L..	21203720
RS232 Cable for PC	80500525
RS232 Cable for Second Scale	80500526
Anti-theft Device	80850000
Carrying Case for RP..R..	80850083
Carrying Case for RP..L..	80850084
PRT CABLE,CBM910,MB35/45,RC,RD,RP,TXXP	80252571
PRT CABLE,STP103,MB35/45,RC,RD,RP,TXXP	80252581
PAPER, STP103 THERMAL PRINTER	80251931
PAPER, CBM910 IMPACT PRINTER	80251932
RIBBON CASSETTE, CBM910	80251933
Printer, Thermal,STP103, 120vac US	80251992
Printer, Thermal,STP103, 230vac EU	80251993
Printer, Thermal,STP103, 240vac UK	80251994
Printer, Impact, CBM910, 100vac JP	80252041
Printer, Impact, CBM910, 120vac US	80252042
Printer, Impact, CBM910, 230vac EU	80252043

8 Appendix

8.1 Information for certified scales in EC countries

M

Weighing instruments verified at the place of manufacture bear the preceding mark on the packing label and green "M" sticker on the descriptive plate. They may be set to work immediately.

M

Weighing instruments which are verified in two steps have no green "M" on the descriptive plate and bear the preceding identifaction mark on the packing label. The second step of the verification must be carried out by the approved OHAUS Service or by the W&M authorities. Please contact OHAUS Customer Service.

The first calibration step of the verification has been carried out at the manufacturing plant. It comprises all tests according to EN45501-8.2.2. Scales with analog connection to the weighing platform require an additional test according to EN45501-3.5.3.3. However, this test is not mandatory if the terminal bears the same serial number as the weighing platform.

If national regulations in individual countries limit the period of validity of the certification, the operator of such a scale is himself responsible for its timely re-certification.

8.2 Safety checks

The compact scales of the series Ranger RP have been checked by accredited testing institutions. They have passed the safety checks listed below and carry the relevant test symbols. Production is subject to production monitoring by the inspection offices.

Country	Test symbol	Standard
Canada USA	C US	CAN/CSA-C22.2 No. 1010.1-92 UL Std. No. 61010A-1
Other countries	**CB Scheme** (no identification)	IEC/EN61010-1:2001

8.3 Table of Geo Values

For weighing instruments verified at the manufacturer's, the geo value indicates the country or geographical zone for which the instrument is verified. The geo value set in the instrument (e.g."Geo 18") appears briefly after switch-on or is specified on a label.

Table **GEO VALUES 3000e** shows the geo values for European countries.

Table **GEO VALUES 6000e/7500e** shows the geo values for different gravitation zones.

8.3.1 GEO VALUES 3000e, OIML Class III (European Countries)

Geographical latitude	Geo value	Country
46°22' – 49°01'	18	Austria
49°30' – 51°30'	21	Belgium
41°41' – 44°13'	16	Bulgaria
42°24' – 46°32'	18	Croatia
48°34' – 51°03'	20	Czechia
54°34' – 57°45'	23	Denmark
57°30' – 59°40'	24	Estonia
59°48' – 64°00' 64°00' – 70°05'	25* 26	Finland
41°20' – 45°00' 45°00' – 51°00'	17 19*	France
47°00' – 55°00'	20	Germany
34°48' – 41°45'	15	Greece
45°45' – 48°35'	19	Hungary
63°17' – 67°09'	26	Iceland
51°05' – 55°05'	22	Ireland
35°47' – 47°05'	17	Italy
55°30' – 58°04'	23	Latvia
47°03' – 47°14'	18	Liechtenstein
53°54' – 56°24'	22	Lithuiania
49°27' – 50°11'	20	Luxemburg
50°46' – 53°32'	21	Netherlands
57°57' – 64°00' 64°00' – 71°11'	24* 26	Norway
49°00' – 54°30'	21	Poland
36°58' – 42°10'	15	Portugal
43°37' – 48°15'	18	Romania

Geographical latitude	Geo value	Country
47°44' – 49°46'	19	Slovakia
45°26' – 46°35'	18	Slovenia
36°00' – 43°47'	15	Spain
55°20' – 62°00' 62°00' – 69°04'	24* 26	Sweden
45°49' – 47°49'	18	Switzerland
35°51' – 42°06'	16	Turkey
49°00' – 55°00' 55°00' – 62°00'	21* 23	United Kingdom

* factory setting

8.3.2 GEO VALUES 6000e/7500e OIML Class III (Height ≤1000 m)

Geographical latitude	Geo value
00°00' – 12°44'	5
05°46' – 17°10'	6
12°44' – 20°45'	7
17°10' – 23°54'	8
20°45' – 26°45'	9
23°54' – 29°25'	10
26°45' – 31°56'	11
29°25' – 34°21'	12
31°56' – 36°41'	13
34°21' – 38°58'	14
36°41' – 41°12'	15
38°58' – 43°26'	16
41°12' – 45°38'	17
43°26' – 47°51'	18
45°38' – 50°06'	19
47°51' – 52°22'	20
50°06' – 54°41'	21
52°22' – 57°04'	22
54°41' – 59°32'	23
57°04' – 62°09'	24
59°32' – 64°55'	25
62°09' – 67°57'	26
64°55' – 71°21'	27
67°57' – 75°24'	28
71°21' – 80°56'	29
75°24' – 90°00'	30

8.4 Sample protocols

Weighing with tare

```
G          0.1085 kg
T          0.0145 kg
N          0.0940 kg
```

Dynamic weighing

```
Dyn WT     43.52 kg
T           3.78 kg
```

Printout with header

```
OHAUS CORP.
www.ohaus.com


G          0.1085 kg
T          0.0145 kg
N          0.0940 kg
```

G = Gross weight

N = Net weight

T = Tare

Dyn WT = dynamically determined weight

Protocol of the scale settings (menu point `List`, see page 46)

```
SOFTWARE VER 5-2-1.04

SCALE
-------------
METROLO     :NO APPr
SNR         :0000000
Scale Build
 SCAL.TYP   :2MULT.RN
 BAS.UNIT   :g
 SCL.CAP1   :6000 g
 RESOL.1    :2 g
 SCL.CAP2   :15000 g
 RESOL.2    :5 g
GEO         :19
DISPLAY
 UNIt1      :g
 UNIt2      :t
 RESOLU     :2 g
 UNt.rOLL   :OFF
tArE
 A-TArE     :OFF
 CHAIn.tr   :ON
 A.CL-tr    :OFF
 PB.TArE    :ON
ZERO
 Z-CAPT     :-2 18
 AZM        :0.5 d
RESTART     :OFF
FILTER
 VIBRAT     :MED
 PROCESS    :UNIVEr
 StABILI    :StAnDrD
Min.WEiG
 SEt.VAL    :150.000 g
 ONOFF:OFF
```

```
APPLICATION
-------------
COUNT
 VAr-SPL     :ON
 Min.RefW    :99
 REF OPT     :OFF
 A-SMPL      :OFF
 A.CL-APW    :OFF
 ACCurCy     :ON
 tOtAL.Ct    :BULK
ACCUMULATION
 COM 1
  LOT.PRNT   :StdArd
  FIN.PRNT   :StdArd
  SUMMARY    :OFF
 COM 2
  LOT.PRNT   :StdArd
  FIN.PRNT   :StdArd
  SUMMARY    :OFF
 REACH Z     :ON
CHECKWEIGHING
 BEEPER      :ON
 SP.TOL -    :0 %
 SEND.MOD    :CONTINU
MEMORY       :10-10-50
INFO.KEY
  INFO.KEY1  :tArE
  INFO.KEY2  :GROSS
  INFO.KEY3  :APW
  INFO.KEY4  :HIGHRES
  INFO.KEY5  :ACCURCY
DYNAMIC      :OFF
```

```
TERMINAL
-------------
DEVICE
 SLEEP       :OFF
 B.LIGHt     :ON
DAtE.tim
 DAtE.FOr    :EU
 DAtE        :18.04.2004
 timE        :21:10:52
 BEEP        :OFF

COMMUNICATION
-------------
COM 1
 MODE        1:Print
 PriNtEr
  tEmPLat    1:StdArd
  ASCi.Fmt
   LINE.FMT  1:MULTI
   LENGtH    1:24
   ADD LF    1:0
 PARAMET
  BAUD       1:2400
  PAriTY     1:7 EVEn
  H.SHAKE    1:XONXOFF
  ChECSUM    1:OFF
  Vcc        1:OFF
COM 2
 MODE        2:DIALOG
 PARAMET
  BAUD       2:9600
  PAriTY     2:8 nonE
  H.SHAKE    2:XONXOFF
  ChECSUM    2:OFF
  Vcc        2:OFF
OPTION
 EtH.Net     :N.A.
 USB         :N.A.
 ANALOG      :N.A.
 DiGitAL     :N.A.
DEF.PrN
 tEmPLt1
 tEmPLt2
```

Legal For Trade

8.5.1 Calibration
Perform user calibration as explained in section 4.3.2

8.5.2 Technician Menu
The menu of your Ranger includes special menu items dedicated to the service technician that must be accessed for Legal For Trade setup. Accessing these menu items requires a special password. Navigation within the technician menu is the same as within the user and supervisor menu.

In order to activate the technician menu follow this sequence:
Press and hold *MENU* key until the CODE prompt appears. At this time press – Back – Yes – Back – Yes to enter the technician menu.

Caution: Settings in the technician menu should only be made by qualified personnel. Incorrect settings could result in the Ranger scale or secondary platform not functioning properly!

8.5.3 Settings
Once in technician menu, navigate through the menu and adjust scale settings in accordance local weights and measures regulations. Refer to the Technician Menu Overview (Next Page) which shows the relevant LFT menu items.

Caution: Once a scale is certified, many of the scale settings are no longer available.

Technician Menu Overview

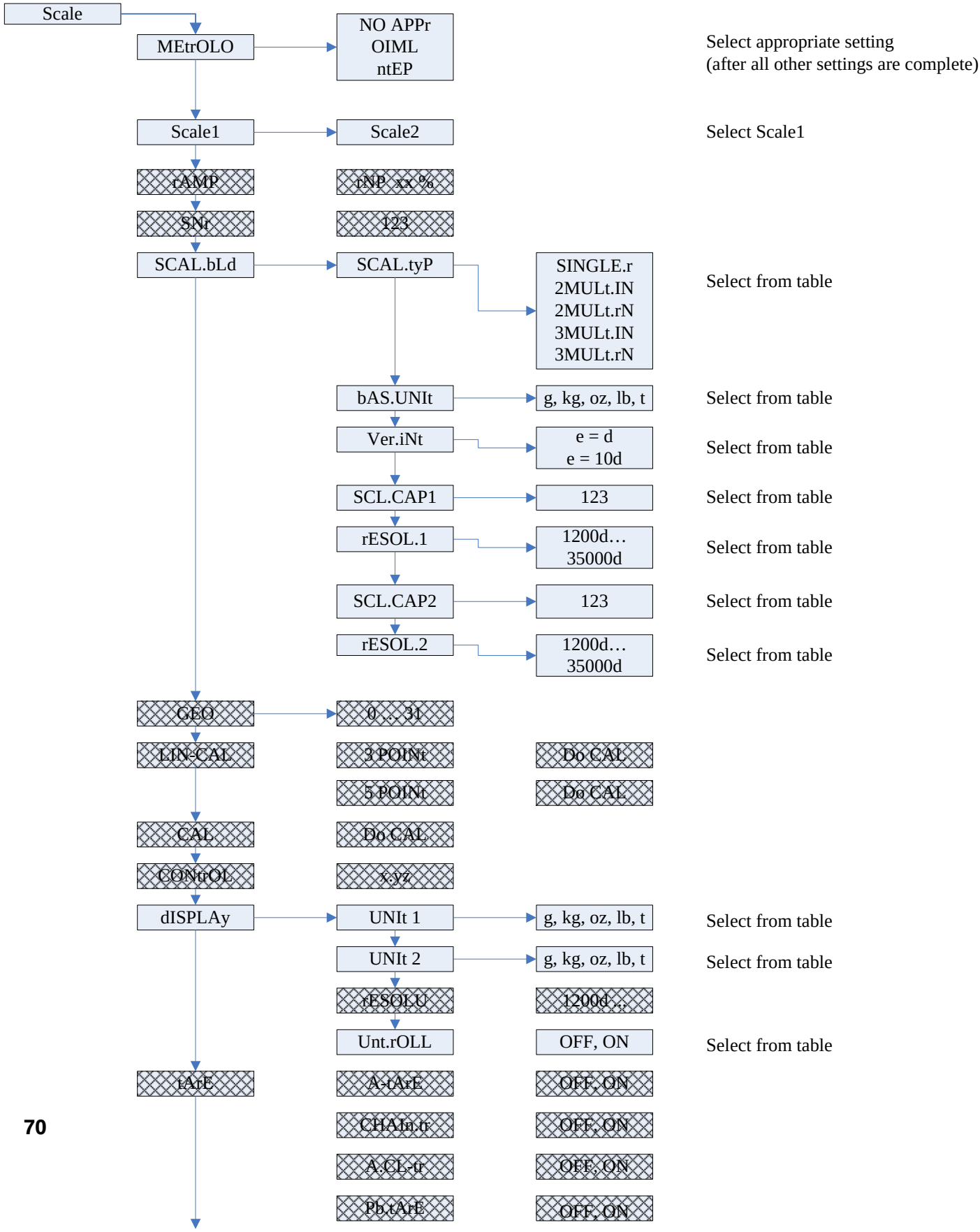

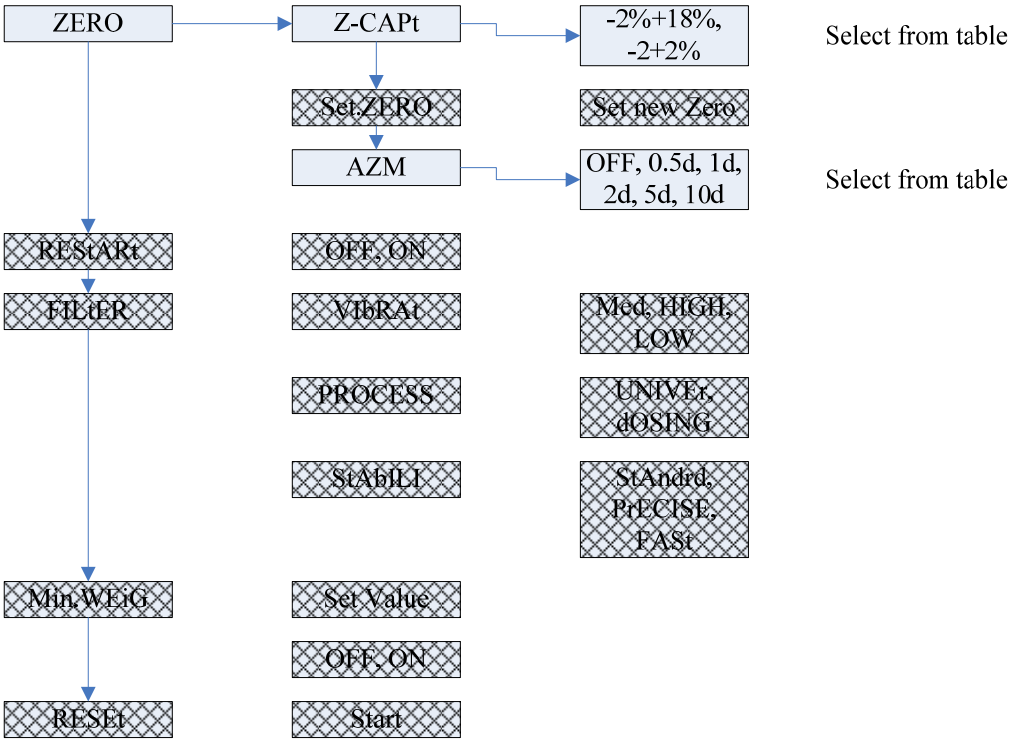
ZERO
Z-CAPt
-2%+18%, -2+2%
Select from table
SetZERO
Set new Zero
AZM
OFF, 0.5d, 1d, 2d, 5d, 10d
Select from table
RESTARt
OFF, ON
FILtER
VIbRAt
Med, HIGH, LOW
PROCESS
UNIVEr, dOSING
StAbILI
StAndrd, PrECISE, FASt
MinWEiG
Set Value
OFF, ON
RESEt
Start

The following tables are Ohaus suggested settings for OIML and NTEP approval. Check with local weights and measures officials for actual requirements.

Recommended Settings for Ranger Approved Scales

NTEP - MFR

	RD3RM	RD6RM	RD15LM	RD35LM
SCAL.bLd				
SCAL.tyP	SINGLE.R	SINGLE.R	SINGLE.R	SINGLE.R
bAS.UNIT	kg	kg	kg	kg
VEr.iNt	e = d	e = d	e = d	e = d
SCL.CAP	000003.0	000006.0	000015.0	000030.0
rESOL	0.00005	0.0001	0.0005	0.0005
dISPLAy				
UNIt 1	lb or kg	lb or kg	lb or kg	lb or kg
UNIt 2	lb or kg	lb or kg	lb or kg	lb or kg
UNt.rOLL	OFF	OFF	OFF	OFF
ZERO				
Z-CAPt	-2+2%	-2+2%	-2+2%	-2+2%
AZM	0.5d	0.5d	0.5d	0.5d
	RP3RM	RP6RM	RP15LM	RP35LM
SCAL.bLd				
SCAL.tyP	SINGLE.R	SINGLE.R	SINGLE.R	SINGLE.R
bAS.UNIT	kg	kg	kg	kg
VEr.iNt	e = d	e = d	e = d	e = d
SCL.CAP	000003.0	000006.0	000015.0	000030.0
rESOL	0.00005	0.0001	0.0005	0.0005
dISPLAy				
UNIt 1	lb or kg	lb or kg	lb or kg	lb or kg
UNIt 2	lb or kg	lb or kg	lb or kg	lb or kg
UNt.rOLL	OFF	OFF	OFF	OFF
ZERO				
Z-CAPt	-2+2%	-2+2%	-2+2%	-2+2%
AZM	0.5d	0.5d	0.5d	0.5d

NTEP - SG

	RD3RS	RD6RS	RD12LS	RD30LS	RD60LS
SCAL.bLd					
SCAL.tyP	SINGLE.R	SINGLE.R	SINGLE.R	SINGLE.R	SINGLE.R
bAS.UNIT	kg	kg	kg	kg	kg
VEr.iNt	e = d	e = d	e = d	e = d	e = d
SCL.CAP	000003.0	000006.0	000012.0	000030.0	000060.0
rESOL	0.0005	0.001	0.002	0.005	0.01
dISPLAy					
UNIt 1	lb, kg or g	lb, kg or g	lb, kg or g	lb, kg or g	lb, kg or g
UNIt 2	lb, kg or g	lb, kg or g	lb, kg or g	lb, kg or g	lb, kg or g
UNt.rOLL	OFF	OFF	OFF	OFF	OFF
ZERO					
Z-CAPt	-2+2%	-2+2%	-2+2%	-2+2%	-2+2%
AZM	0.5d	0.5d	0.5d	0.5d	0.5d
	RC3RS	RC6RS	RC12LS	RC30LS	RC60LS
SCAL.bLd					
SCAL.tyP	SINGLE.R	SINGLE.R	SINGLE.R	SINGLE.R	SINGLE.R
bAS.UNIT	kg	kg	kg	kg	kg
VEr.iNt	e = d	e = d	e = d	e = d	e = d
SCL.CAP	000003.0	000006.0	000012.0	000030.0	000060.0
rESOL	0.0005	0.001	0.002	0.005	0.01
dISPLAy					
UNIt 1	lb, kg or g	lb, kg or g	lb, kg or g	lb, kg or g	lb, kg or g
UNIt 2	lb, kg or g	lb, kg or g	lb, kg or g	lb, kg or g	lb, kg or g
UNt.rOLL	OFF	OFF	OFF	OFF	OFF
ZERO					
Z-CAPt	-2+2%	-2+2%	-2+2%	-2+2%	-2+2%
AZM	0.5d	0.5d	0.5d	0.5d	0.5d

OIML - MFR

	RD3SM	RD6SM	RD6RM	RD15LM	RD35LM
SCAL.bLd					
SCAL.tyP	2NULt.RN	2NULt.RN	2NULt.RN	2NULt.RN	2NULt.RN
bAS.UNIT	kg	kg	kg	kg	kg
VEr.iNt	e = d	e = d	e = d	e = d	e = d
SCL.CAP1	000000.6	000001.2	000001.2	000003.5	000007.0
RESOL.1	0.00001	0.00001	0.0001	0.0001	0.0001
SCL.CAP2	000003.1	000006.1	000006.1	000015.1	000035.1
RESOL.2	0.0001	0.0001	0.001	0.001	0.001
dISPLAy					
UNIt 1	g or kg	g or kg	g or kg	g or kg	g or kg
UNIt 2	g or kg	g or kg	g or kg	g or kg	g or kg
UNt.rOLL	OFF	OFF	OFF	OFF	OFF
ZERO					
Z-CAPt	-2+18%	-2+18%	-2+18%	-2+18%	-2+18%
AZM	0.5d	0.5d	0.5d	0.5d	0.5d
	RP3SM	RP6SM	RP6RM	RP15LM	RP35LM
SCAL.bLd					
SCAL.tyP	2NULt.RN	2NULt.RN	2NULt.RN	2NULt.RN	2NULt.RN
bAS.UNIT	kg	kg	kg	kg	kg
VEr.iNt	e = d	e = d	e = d	e = d	e = d
SCL.CAP1	000000.6	000001.2	000001.2	000003.5	000007.0
RESOL.1	0.00001	0.00001	0.00001	0.0001	0.0001
SCL.CAP2	000003.1	000006.1	000006.1	000015.1	000035.1
RESOL.2	0.0001	0.0001	0.0001	0.001	0.001
dISPLAy					
UNIt 1	g or kg	g or kg	g or kg	g or kg	g or kg
UNIt 2	g or kg	g or kg	g or kg	g or kg	g or kg
UNt.rOLL	OFF	OFF	OFF	OFF	OFF
ZERO					
Z-CAPt	-2+18%	-2+18%	-2+18%	-2+18%	-2+18%
AZM	0.5d	0.5d	0.5d	0.5d	0.5d

OIML - SG

	RD3RD	RD6RD	RD15R(L)D	RD35LD
SCAL.bLd				
SCAL.tyP	2NULt.RN	2NULt.RN	2NULt.RN	2NULt.RN
bAS.UNIT	kg	kg	kg	kg
VEr.iNt	e = d	e = d	e = d	e = d
SCL.CAP1	000001.5	000003.0	000006.0	000015.0
RESOL.1	0.0005	0.001	0.002	0.005
SCL.CAP2	000003.0	000006.0	000015.0	000035.0
RESOL.2	0.001	0.002	0.005	0.01
dISPLAy				
UNIt 1	g or kg	g or kg	g or kg	g or kg
UNIt 2	g or kg	g or kg	g or kg	g or kg
UNt.rOLL	OFF	OFF	OFF	OFF
ZERO				
Z-CAPt	-2+18%	-2+18%	-2+18%	-2+18%
AZM	0.5d	0.5d	0.5d	0.5d
	RP3RD	RP6RD	RP15R(L)D	RP35LD
SCAL.bLd				
SCAL.tyP	2NULt.RN	2NULt.RN	2NULt.RN	2NULt.RN
bAS.UNIT	kg	kg	kg	kg
VEr.iNt	e = d	e = d	e = d	e = d
SCL.CAP1	000001.5	000003.0	000006.0	000015.0
RESOL.1	0.0005	0.001	0.002	0.005
SCL.CAP2	000003.0	000006.0	000015.0	000035.0
RESOL.2	0.001	0.002	0.005	0.01
dISPLAy				
UNIt 1	g or kg	g or kg	g or kg	g or kg
UNIt 2	g or kg	g or kg	g or kg	g or kg
UNt.rOLL	OFF	OFF	OFF	OFF
ZERO				
Z-CAPt	-2+18%	-2+18%	-2+18%	-2+18%
AZM	0.5d	0.5d	0.5d	0.5d

After all settings have been made, access the Scale > Metrolo menu item and set to OIML or NTEP as required.

8.5.4 Verification
Before this product can be used in a trade approved application, it must be inspected in accordance with local weights and measures regulations. It is the responsibility of the purchaser to ensure that all pertinent legal requirements are met. Please contact your local weights and measures office for further details.

8.5.5 Sealing Scale
Scales must be certified by an accredited organization, and a certification seal must be affixed before the instrument may be used as a certified scale.

8.5.6 Unlocking Scale
When scales are in LFT mode, access to the technician mode (with the keypad) is blocked. To access the technician mode, proceed as follows:

Switch off the scale or terminal.
Remove the bottom plate of the scale by undoing the retaining screws (Torx T20).

Caution: In order to remove the bottom plate it is necessary to break the certification seal! Once this seal has been destroyed, the scale must be recertified by an accredited organization, and a new certification seal must be affixed before the instrument may be used as a certified scale again!

Hold down the service switch (pushbutton) on the analog PCB (indicated by an arrow in the drawings below), with power applied to the scale. Keep the service switch pressed in until "SCALE" appears in the display.

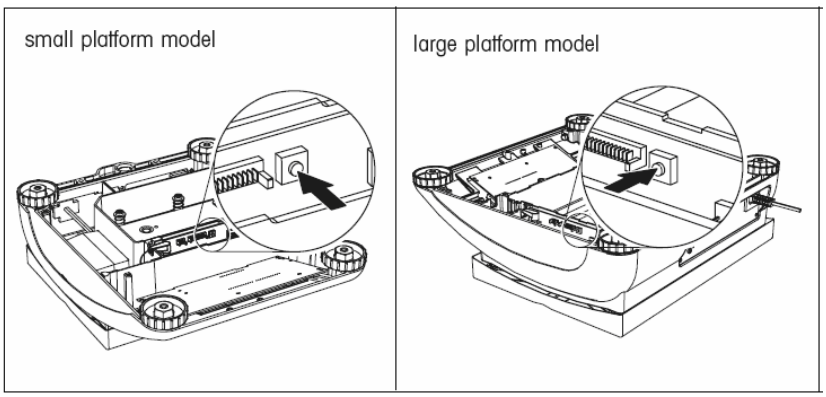

9 Index

A
Accessories 63
Adjustment 34
Alignment 10
Ambient conditions 59
Applications 58
Auxiliary scale 28
Average 15, 40
Average piece weight 24

C
Calibrate 34
Capacity utilisation 15
Chain tare 15
Checkweighing 16
Configure memory 39
Continuous mode 53
Counting parts 22

D
Dimensions 61
Display 8
Display accuracy 35
Dynamic weighing 15, 40

E
Error messages 55

F
Filter 35

I
Identification 18
Info button 19
Interfaces
- Configure 42
- Connections 62

K
Keyboard 9

M
Mains connection 59
Memory 39
Menu
- Application 37
- Communication 42
- Diagnosis 46
- Operation 29
- Overview 31
- Scale 34
- Terminal 41

Menu structure 30
Minimum accuracy 23

O
OHAUS commands 48
Operator menu 29
Options 6, 43

P
Password 29
Power supply 11
Protocol 18

Q
Quantity scales 28

R
Readability 60
Reference determination, automatic 24
Reference optimisation 24
Reference quantity 23
Reference scales 27
Reset
- Application 40
- Interface 43
- Scale 37
- Terminal 42

RS422/RS485 52

S
Safety checks 64
Sample protocols 68
Scales types 6
Settings 58
SICS commands 50
Supervisor menu 29
Switching off 12
Switching on 12

T
Tare
- Automatic 13
- Chain tare 15
- Clear 13

Tare weight
- Call up 14
- call up 14
- Clear 14
- Enter 13
- Save 14

Target quantity 26
Target weight 16
- Call up 17
- Clear 17
- Save 16

Terminal settings 41
TOLEDO Continuous 53
Totalising 20
Two scales 19, 27
Type key 57

W
Weighing ranges 60
Weighing unit 35
Weighing-in 17
Weight 61

Z
Zeroing 12

LIMITED WARRANTY

Ohaus products are warranted against defects in materials and workmanship from the date of delivery through the duration of the warranty period. During the warranty period Ohaus will repair, or, at its option, replace any component(s) that proves to be defective at no charge, provided that the product is returned, freight prepaid, to Ohaus.

This warranty does not apply if the product has been damaged by accident or misuse, exposed to radioactive or corrosive materials, has foreign material penetrating to the inside of the product, or as a result of service or modification by other than Ohaus. In lieu of a properly returned warranty registration card, the warranty period shall begin on the date of shipment to the authorized dealer. No other express or implied warranty is given by Ohaus Corporation. Ohaus Corporation shall not be liable for any consequential damages.

As warranty legislation differs from state to state and country to country, please contact Ohaus or your local Ohaus dealer for further details.

Ohaus Corporation
19A Chapin Road
P.O. Box 2033
Pine Brook, NJ 07058 USA
Tel: (973) 377-9000
Fax: (973) 844-7177
www.ohaus.com

with offices worldwide

P/N 22017173A ©2007 Ohaus Corporation, all rights reserved

Printed in Germany